Installation and Maintenance Manual

IM 1152-3

Group: **Fan Coil**
Part Number: **910175957**
Date: **May 2016**

ThinLine Horizontal Fan Coils and Cabinet Unit Heaters

Type FC and FH

Exposed Horizontal Cabinet Fan Coil

Recessed Horizontal Cabinet Fan Coil

Concealed Horizontal Unit Heater

Concealed Horizontal Fan Coil

Introduction. 3
Safety 4
Operating Limits 4
Receiving and Storage 5
Pre-Installation Notes 5
Installation. 7
Uncrating and Inspecting the Unit 7
Installation 7
Recommended Maintenance Clearance 8
Duct Connections 8
Ductwork Recommendations 8
External Insulating Requirements 8
Piping Connection Recommendations 9
Chilled Water Pipe Connections 10
Field-Installed Valve & Piping 11
Steam Piping Connections 12
Two-Pipe Systems with Electric Heat 12
Electrical Connections. 13
Accessories 14
Condensate Overflow Detection Device 14
Decorative Trim Flange for Partially-Recessed Units 14
Electric Heat Over-Temp Reset Button 14
Initial Start Up 15
Cleaning & Flushing the Water System. 15
Venting Hydronic Coils 15
Equipment Start Up Check List 16
Maintenance 17
General Maintenance 17
Monthly Intervals 19
Replacement Parts 20
Controls and Thermostats. 21
Controls. 21
Digital Thermostats 23
T180 Programmable Thermostat 24
MicroTech III Controller 24
Sensors 25
Physical Data 28
Unit Data 28
Unit Dimensions 29
Valve and Piping Packages 37
Factory-Installed Valve and Piping Packages 37
Control Valve Options 39
Wiring Diagram. 42
Model Number Description 47
Addendum IM 1014 — MT155 53
Addendum IM 1089 — MT155 A/B. 57
Addendum IM 1015 — MT158 A. 61
Addendum IM 1016 — MT158 B 65
Addendum IM 1017 — MT168 69
Addendum IM 846 — MT170 73
Addendum IM 1019 — MT180 83
Addendum IM 1171
— Digitally Adjustable Display Sensor. 103
Addendum IM 831
— Thermostat Conversion Kit. 115
Addendum IM 763
— Automatic Changeover Switch 117
Addendum OM 1111 119

Daikin Thinline Horizontal Fan Coils are intended for use in single zone applications. They are available in sizes from 200 to 1200 cfm. Figure 2 describes the main features of these units and can be referred to for component placement. These units are available in two-pipe configurations with one hydronic coil, with or without electric heat.

They are also available in four-pipe configurations with a primary coil and a secondary reheat or preheat coil. A variety of factory-built piping packages are available, either factory or field-installed. Units are available with a variety of thermostat and fan speed control options, including the MicroTech® III controller board.

Figure 1: Nomenclature (see Table 3 page 49 through page 53 for complete model number description)

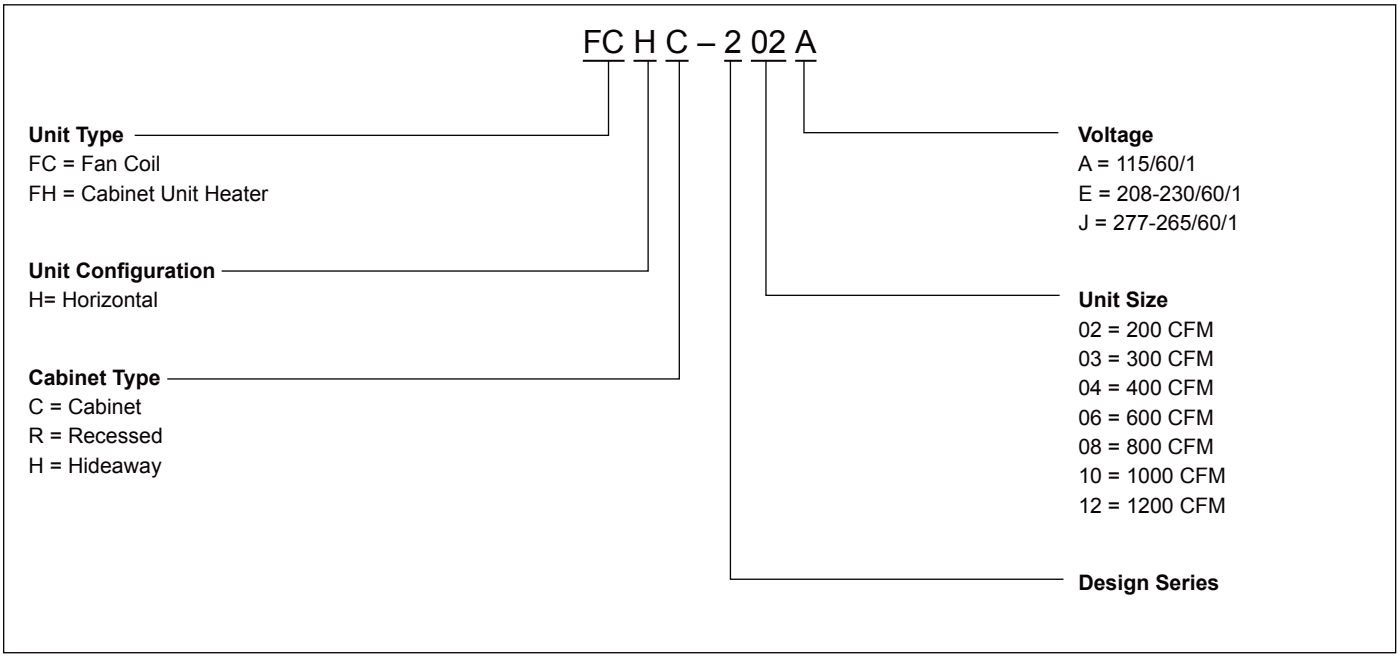

Figure 2: Model FCHH with Return Plenum

Safety

Follow all safety codes. Wear safety glasses and work gloves. Use a quenching cloth for brazing operations. Have a fire extinguisher available. Follow all warnings and cautions in these instructions and attached to the unit. Consult applicable local building codes and National Electrical Codes (NEC) for special requirements.

Recognize safety information. When you see a safety symbol on the unit or in these instructions, be alert to the potential for personal injury. Understand the meanings of the words DANGER, WARNING, and CAUTION.

- **DANGER** identifies the most serious hazards that will result in death or severe personal injury;
- **WARNING** means the hazards can result in death or severe personal injury;
- **CAUTION** identifies unsafe practices that can result in personal injury or product and property damage.

Improper installation, adjustment, service, maintenance, or use can cause explosion, fire, electrical shock, or other conditions which may result in personal injury or property damage.

This product must be installed only by personnel with the training, experience, skills, and applicable licensing that makes him/her “a qualified professional HVACR installer.”

Operating Limits

This equipment is designed for indoor installation only. Sheltered locations such as attics, garages, etc., generally will not provide sufficient protection against extremes in temperature and/or humidity, and equipment performance, reliability, and service life may be adversely affected.

DANGER

Disconnect all electrical power before servicing unit. Electrical shock will cause severe injury or death.

WARNING

Hazardous Voltage!

Use copper conductors only. Unit terminals are not designed to accept other types of conductors. Failure to do so may cause damage to the equipment.

WARNING

Personal injury hazard. Wear protective gloves to avoid possible cuts and abrasions from exposed edges. Avoid contact with sharp edges

CAUTION

Cleaning agents may cause serious damage to internal components, such as aluminum coils and electronic controls, etc. Do not operate fan coil while building maintenance cleaning agents are in use.

CAUTION

Sharp edges and coil surfaces are injury hazards. Avoid contact with them.

CAUTION

Moving machinery and electrical power hazards may cause severe personal injury or death. Disconnect and lock off power before servicing equipment.

NOTICE

Installation and maintenance are to be performed only by qualified personnel who are familiar with and in compliance with state, local and national codes and regulations, and experienced with this type of equipment.

Receiving and Storage

Upon receipt of the equipment, check carton for visible damage. Make a notation on the shipper's delivery ticket before signing. If there is any evidence of rough handling, immediately open the cartons to check for concealed damage. If any damage is found, notify the carrier within 48 hours to establish your claim and request their inspection and a report. The Warranty Claims Department should then be contacted.

Do not stand or transport the machines on end. For storing, each carton is marked with "up" arrows.

Temporary storage at the job site must be indoors, completely sheltered from rain, snow, etc. High or low temperatures naturally associated with weather patterns will not harm the units. Excessively high temperatures, 140°F (60°C) and higher, may deteriorate certain plastic materials and cause permanent damage.

IMPORTANT

This product was carefully packed and thoroughly inspected before leaving the factory. Responsibility for its safe delivery was assumed by the carrier upon acceptance of the shipment. Claims for loss or damage sustained in transit must therefore be made upon the carrier as follows:

VISIBLE LOSS OR DAMAGE
Any external evidence of loss or damage must be noted on the freight bill or carrier's receipt, and signed by the carrier's agent. Failure to adequately describe such external evidence of loss or damage may result in the carrier's refusal to honor a damage claim. The form required to file such a claim will be supplied by the carrier.

CONCEALED LOSS OR DAMAGE
Concealed loss or damage means loss or damage which does not become apparent until the product has been unpacked. The contents may be damaged in transit due to rough handling even though the carton may not show external damages. When the damage is discovered upon unpacking, make a written request for inspection by the carrier's agent within fifteen (15) days of the delivery date and file a claim with the carrier

Pre-Installation Notes

Installation and maintenance are to be performed only by qualified personnel who are familiar with and in compliance with state, local and national codes and regulations, and experienced with this type of equipment. Before beginning installation, please read this publication in its entirety. Directions given in this bulletin for right and left sides or coil hand assume a position facing the front (discharge) of the unit.

1. To prevent damage, do not operate this equipment for supplementary heating and cooling during the construction period. Doing so will void the warranty.
2. Inspect the carton for any specific tagging numbers indicated by the factory per a request from the installing contractor. At this time the voltage, phase and capacity should be checked against the plans.
3. Check the packing list and unit identification/tagging numbers against the plans to verify that the unit is being installed in the correct location. The unit data plate is attached to the front of the control box (see Figure 3). Remove the bottom panel on cabinet units to access it. The panel contains specific information on standard components as listed in Figure 1 on page 3 and starting in Table 3 on page 49.
4. Before installation, check the available dimensions of the space where the unit is to be installed against the dimensions of the unit.
5. Note the location and routing of water piping, condensate drain piping, and electrical wiring. The locations of these items should be clearly marked on submittal drawings.
6. An installing contractor may find it beneficial to confer with piping, sheet metal, and electrical foremen before installing any unit.

NOTE: Check the unit data plate for correct voltage with the plans before installing the equipment. Also, make sure all electrical ground connections are made in accordance with local code.

7. After installation, cover the unit with the shipping carton or other appropriate material for protection during finishing of the building. This is critical while spraying fireproofing material on ceiling beams, bar joists, sandblasting, spray painting and plastering. Damage to the unit due to a failure to protect it during finishing of the building is not covered by the warranty.
8. Maximum entering water temperature is 200°F (93°C).

Figure 3: Data Plate Location

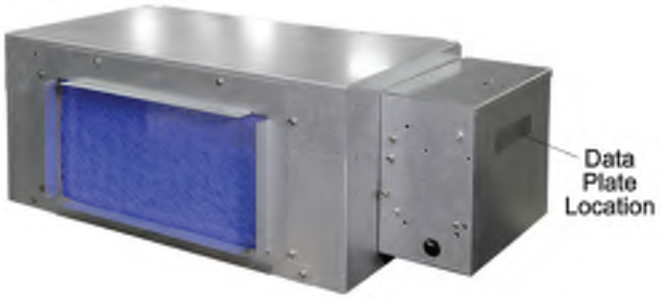

9. Air ducts, when used with hideaway units, should be installed in accordance with local and national codes, including National Fire Protection Association standards for the Installation of Air Conditioning and Ventilating Systems and the National Fire Protection Association standards for the Installation of Air Conditioning and Ventilation Systems other than Residence Type.
10. Completed installation of hideaway units without return plenum must comply with the requirements of NFPA90B with regard to the use of concealed ceiling spaces as return air plenums.
11. When a return air duct is not provided, applicable codes may limit installation to single story buildings.
12. A one-inch duct collar is provided on units with a ducted return and/or discharge to attach ductwork. Daikin recommends using galvanized sheet metal ductwork. Slide the sheetmetal duct over the duct collar flange of the unit, seal the joint and fasten with sheetmetal screws.
13. Vibration isolators are generally not needed, if required by local codes, they must be provided by the installing contractor.
14. Valve and Piping Packages supplied with the unit should be supported during the installation process. It is advisable to keep the support in place after the unit has been installed and started.

Uncrating and Inspecting the Unit

⚠ WARNING

Plastic packaging is a suffocation hazard, dispose of properly. Keep away from children.

1. Carefully remove the packaging, remaining alert to any signs of shipping damage. Be careful not to discard components that may be included with the packaging.
2. If the unit is damaged, file a claim with the carrier. Notify the local Daikin representative immediately.
3. You may want to retain some or all of the packaging to provide jobsite unit location information and temporary protection for the fan coil after installation. Be sure to dispose of plastic packaging and protective cardboard properly, in accordance with local recycling rules and guidelines.
4. Touch up painted panels if necessary. If panels need paint, sanding is not necessary. However, clean the surface of any oil, grease, or dirt residue so the paint will adhere. Purchase factory approved touch up paint from your Daikin representative or Daikin Service.

Installation

1. Consult job blueprints for unit location.
2. Clean area where unit is to be installed, removing all construction dirt and debris.
3. Remove the unit from the shipping carton and plastic covering. Save the carton and plastic to use as a protective cover after the installation is complete.
4. Rotate fan wheels by hand to make sure the wheels rotate freely.
5. Unit is ready for installation. See Duct Connections for more detail.
6. Secure unit in proper position. The top of the unit must be level. If hanger rods are used, “back-up” nuts should be put on the rods to prevent the mounting nuts from loosening. The drain pan is designed to have a little gradient to ensure proper drainage and operation. Do not level Drain Pan.
7. Water and drain connections can now be made to the unit. Piping must be installed in accordance with local codes and regulations. See Piping Connection Recommendations for more detail.
8. Vent the coils.
9. All water and drain lines should be well insulated to prevent sweating and heat loss. See External Insulating Requirements for more detail Electrical connections can now be made to the electrical panel or chase, in case the panel is not provided. Unless it is a special-order unit, all electrical connections are made in the main electrical control panel located on the opposite side of the primary panel connections. Electrical power wiring goes through the chase located between the drain pan and coil section. If needed the power connections may be done through knockouts located on both sides of the unit. See Figure 4.

Figure 4: Electrical Knockouts (Typical)

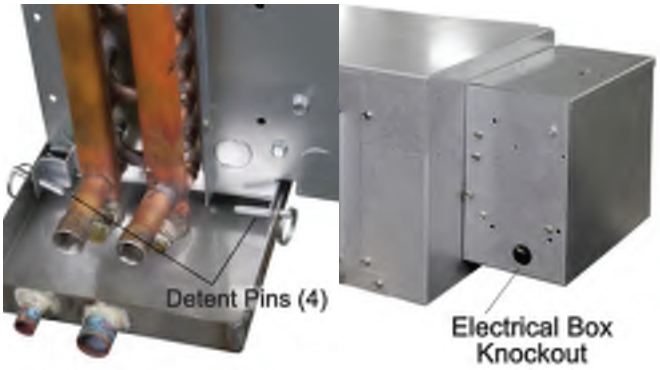

10. The installer shall provide wiring to the unit. Branch circuit overcurrent protection and disconnect should conform to the applicable electrical codes. The motor provided is “thermally protected.” See Electrical Connections on page 13.
11. All panels and doors should be in place and closed before starting up the unit.
12. During summer construction, there is an unusually high amount of moisture in the air; therefore, the initial pulldown should be very gradual (high speed for maximum airflow with reduced GPM and elevated chilled water temperature for reduced capacity). This procedure will reduce the possibility of the unit sweating.

Recommended Maintenance Clearance

Cabinet units have removable bottom and side panels for easy access to components for service and maintenance. The fan assembly and main drain pan are easily removable from the bottom for cleaning. See Accessing/Removing the Main Fan Deck and Motor Assembly on page 20 for more information.

Figure 5 shows recommended maintenance clearances for hideaway units. For exposed units use: 24 inches [61 cm] on either side (A and B) and 18 inches [46 cm] (C) below for bottom panel removal. Units are referred to as either right-hand or left-hand depending upon the piping connection. Hand is designated by facing the front of the unit (airflow discharges from the front or bottom).

Duct Connections

Air ducts, when used with hideaway units, should be installed in accordance with local and national codes, including National Fire Protection Association standards for the Installation of Air Conditioning and Ventilating Systems and the National Fire Protection Association standards for the Installation of Air Conditioning and Ventilation Systems other than Residence Type.

A one-inch duct collar is provided on units with a ducted return and/or discharge to attach ductwork. Daikin recommends using galvanized sheet metal ductwork. Slide the sheetmetal duct over the duct collar flange of the unit, seal the joint and fasten with sheetmetal screws.

Ductwork Recommendations

Follow the general recommendations listed below when installing the ductwork for the unit.

1. Air ducts should be made of galvanized steel and connected to the flange of the unit with a canvas connector. Insert the duct into the flange and fix with screws. Duct connections must be installed in accordance with national and local codes.
2. Discharge ductwork should run in a straight line, unchanged in size or direction, for a minimum distance of three fan diameters from the unit (approximately 20 inches).
3. Avoid making sharp turns when making duct turns and transitions. Use proportional splits, turning vanes, and air scoops when necessary.
4. When possible, construct and orient supply ductwork turns in the same direction as the fan rotation.

External Insulating Requirements

Insulate and vapor-seal surfaces that are colder than the surrounding air dew point to prevent unplanned condensation. Daikin recommends field-insulation in the following areas to prevent potential condensate problems:

- Supply and return water piping connections
- Condensate drain lines and connections
- Fresh air intake duct connections
- Discharge duct connections
- Wall boxes

Figure 5: Concealed Hideaway Unit Clearance

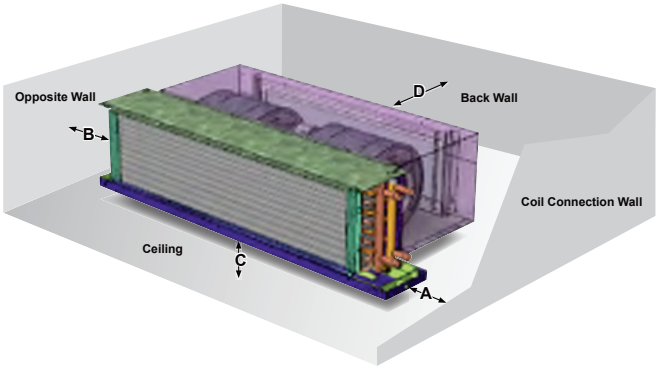

A = 8" (same side connection) or 24" (opposite side)
B = 24"
C = 3"
D = 18" for Hideaway units without plenum

Piping Connection Recommendations

General Guidelines

IMPORTANT

Venting is required on the return piping for secondary preheat or reheat coils. It is included on factory-built piping packages, but must be added by the installing contractor for field-installed piping. See Figure 7

WARNING

Avoid overheating when soldering field connections to the coil to prevent leakage, overheating of the copper tubes, and melting of valves, factory-soldered joints or component gasketing. A quenching cloth is recommended. See Figure 6.

- Piping can be steel, copper or PVC, but must comply with local codes.
- Proper ventilation is required for soldering. When soldering, use a quenching cloth to protect fan coil components from overheating damage—melting insulation, also damage to valves, wiring, electronics, sensors, etc. See Figure 6. When Daikin provides valve packages with unions, o-rings are included. When soldering near unions, remove the o-rings before heating.

Figure 6: Protect Components from Overheating

- If sealant compound is not provided for flexible hose fittings, apply Teflon tape to the connections to help prevent leaks.
- Ensure proper insulation of supply and return piping. Proper insulation prevents loss of fan coil capacity, overheating of end compartments, and/or moisture dripping.
- The piping to and from the unit must be protected from outside air and freeze conditions. It must be suitably insulated for condensation and for heat loss or gain. Penetrations entering the unit end compartments must be fitted/sealed for unit integrity.
- Exterior condensate may be an issue if field piping does not have a control valve. Review the supply and return header locations in the dimensions drawings. If using a field-assembled piping package, allow sufficient room to install the secondary drain pan. Uninsulated piping for chilled water should not extend over the edges of the secondary condensate drain pan.
- Supply and return shutoff valves are recommended at each unit. The return valve is used for balancing and should have a “memory stop” so that it can always be closed off, but can only be re-opened to the proper position for the flow required.
- Primary coils are factory-equipped with vents for venting the system, but secondary coils (preheat or reheat) are not. If the unit is not equipped with factory-built piping packages which includes a secondary coil air vent, then vents must be added. See Figure 7.
- Be sure to install control valves on the correct fan coil. Indiscriminate mixing of valves in the field can result in valves improperly sized for the desired flow rate, which can result in poor operation and coil freezes.
- Install control valves so there is at least 2" (51mm) minimum clearance to remove the actuator from the valve body.

Figure 7: Secondary Coil Air Vent

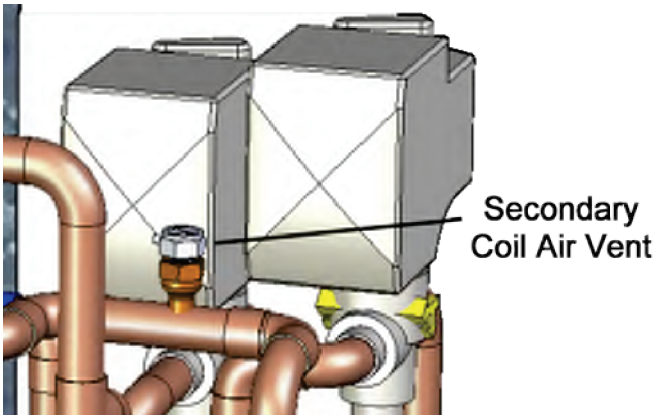

- Do not connect a unit to the supply and return piping until the water system has been cleaned and flushed completely. After this is done, the initial connection should have all valves wide open in preparation for water system flushing.
- Automatic flow control devices must not be installed prior to system cleaning and flushing.
- Check local code for any requirement for electrical fittings.

Drain Piping

- Condensate piping can be steel, copper, or PVC. A means of disconnection must be furnished to facilitate fan deck removal.
- No point of the drain system may be above the drain pan of any unit.
- Pipe insulation is recommended to avoid condensation.
- Suggested slope of the drain pipe is at least 1/8" per foot to facilitate adequate condensate drainage but local code requirement should prevail.
- Slide the pipe over the drain pan nipple and tighten the collar on the pipe with a hose clamp (supplied by installer).
- The drain line should be supported to prevent undue stress on the secondary drain pan. Make sure the drain line is free of kinks.
- Trap drain line according to local codes.
  NOTE: Traps for exposed units may be located outside the cabinet as there is insufficient space inside the unit.
- Cap overflow drain connection or connect it with clear piping to the point where it can be used as an indicator for a clogged main drain connection.

Chilled Water Pipe Connections

No Valve Package

- Connect chilled water pipes to the unit. The water supply is on the bottom and water return is on top of the coil header.

Connecting to a Factory-Installed Valve & Piping Package

To view connection locations for factory-installed valve & piping packages, see Valve and Piping Packages on page 39. Before installing supply and return lines to a factory piping package, review the following items.

- All piping connections are 5/8" O.D.S. (1/2" nominal) female copper connections.
- Supply and return piping should not interfere with the secondary drain pan or condensate line. The installer must provide adequate piping system filtration and water treatment. Daikin Deluxe and Enhanced piping packages include a strainer which prevents debris from entering the coil. Clean the strainer regularly.
- The fan coil ships with brackets and special shipping packaging to adequately support the piping package during shipment. Remove the packaging before connecting to the water piping but leave the support brackets in place during and after the installation.
- Set ALL valves to the fully open position to prevent damage to the valve seat during brazing. Use a quenching cloth as protection.
- Remove the secondary drain pan, if in place, to prevent exposure to dripping solder or excessive temperatures.
- Solder water piping connections to supply and return end connections. Avoid overheating factory soldered joints to prevent the possibility of leakage.
- Insulate fan coil piping to secondary drain pan connections and any piping that is not above the secondary drain pan.

Field-Installed Valve & Piping

Review General Guidelines on page 9 before beginning. Then carry out the following steps to install valves and piping.

- For units equipped with a secondary coil make sure that an air vent is included in the return line piping. Primary coils are factory-equipped with vents, secondary coils are not. See Figure 7. Valve Package support brackets are included with the secondary coil kits.
- Remove the secondary drain pan, if in place, to prevent exposure to dripping solder or excessive temperatures.

NOTE: Field-installed valve and piping packages provided by Daikin include the secondary drain pan. If valve packages by the field, secondary drain pans should be provided by others.

- Slide ½" copper tubing or connection couplings (provided by installer) onto the coil connections. Solder the joint using a good-quality, lead-free solder to provide a watertight connection.
- After connections are complete, insulate all piping to the coil connections as necessary to prevent condensate from dripping outside of the secondary drain pan.
- Install the optional secondary drain pan.

Shutoff/Balancing Valve

Each fan coil should be at least be equipped with shutoff valves on both the supply and return lines for easy serviceability and removal if it becomes necessary. We suggest using our combination shutoff/balancing valves between the main supply line and the fan coil unit. These are furnished as part of a field-installed valve & piping package. The balancing valve installed on the return line is used to adjust the water flow to provide the best performance.

Automatic Changeover Sensor

Two-pipe changeover units require an automatic changeover switch or pipe sensor that determines heating or cooling mode based on the supply water temperature. On units with a factory-installed valve & piping package, the factory straps the changeover switch or sensor to the piping supply water pipe. See Figure 8. For field-installed Valve Packages, the ACO must be ordered separately.

For a two-pipe system with intermediate supplemental electric heat, a second set is required including a changeover switch. See Two-Pipe Systems with Electric Heat on page 12 section for more details.

NOTE: The bypass bleed line is used on 2-pipe Fan Coils with 2-way control valves to prevent stagnation of water near the aqua-stat or pipe sensor. The bleed line allows 3 – 4 gpm of flow to bypass the coil which is necessary for the proper function of the automatic changeover system. All 2-pipe valve packages with 2-way control valves automatically include the bypass bleed line. If the bleed line is unwanted, it may be crimped by the installing contractor to prevent bypass flow.

If the unit does not have a factory-installed valve & piping package, the changeover switch or sensor can be ordered for field installation. The installer should attach the sensor or auto changeover switch parallel to and in direct contact with the supply water pipe.

NOTE: The installer is responsible to ensure the changeover sensor is installed in a location that can sense active water temperature. Otherwise, the unit may fail to sense the correct operating mode and disable temperature control.

When using field-supplied 3-way control valves, install the changeover sensor upstream of the valve and the bypass on the supply water pipe. When using field-supplied two-way control valves install the changeover sensor in a location that will detect active water temperature. The unit must always be able to sense the correct system water temperature, regardless of the control valve position.

NOTE: The maximum length of the automatic changeover wire cannot exceed 10 feet from the control panel to the sensor. If the wire extends beyond the unit chassis, use shielded conductors to eliminate radio frequency interference (RFI).

Figure 8: Automatic Changeover Switch and Sensor

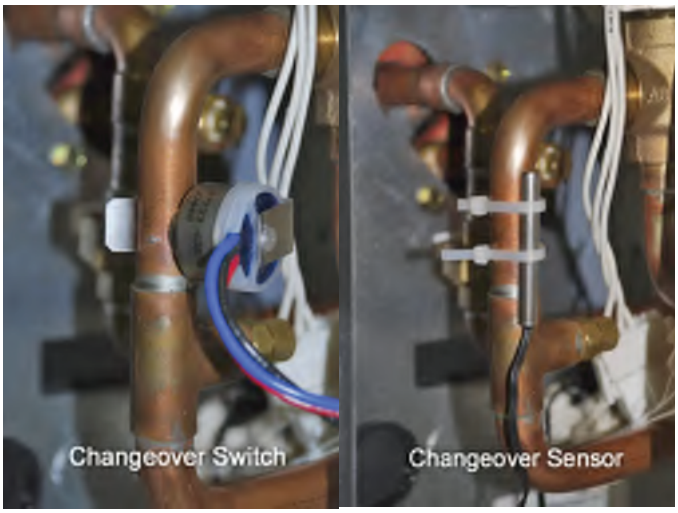

Steam Piping Connections

CAUTION

Coil Damage!

In all steam coil installations, the condensate return connections must be at the low point of the coil to ensure condensate flows freely from the coil at all times. Failure to do so may cause physical coil damage from water hammer, unequal thermal stresses, freeze-up and/or corrosion

Make piping connections to the steam coil per job requirements. (Daikin does not supply steam piping connections.) Install a 1/2", 15-degree swing check vacuum breaker in the unused condensate return trapping as close as possible to the coil. The following procedures are recommended:

- Vent the vacuum breaker line to atmosphere or connect it into the return main at the discharge side of the steam trap.
- Pitch all steam supply and return mains down a minimum of one inch per ten feet in the direction of flow.
- Do not drain the steam mains or takeoff through the coils. Drain the mains ahead of the coils through a steam trap to the return line.
- Overhead returns require one psig of pressure at the steam trap discharge for each two-feet elevation to ensure continuous condensate removal.
- Proper steam trap selection and installation is necessary for satisfactory coil performance and service life. For installation, use the following steps:
  - Position the steam trap discharge at least 12 inches below the condensate return connection. This provides sufficient hydrostatic head pressure to overcome trap losses and ensure complete condensate removal.
  - Daikin recommends using float and thermostatic traps because of gravity drain and continuous discharge operation.
  - Use float and thermostatic traps with atmospheric pressure gravity condensate return, with automatic controls or where the possibility of low pressure supply steam exists.
  - Always install strainers as close as possible to the trap inlet side.

Two-Pipe Systems with Electric Heat

IMPORTANT

Daikin recommends operating the electric heater at the High motor speed setting.

The electric heating coil is designed to be the total source of heat for the unit. If used for auxiliary intermediate season heating, additional control is required. A second changeover switch is required. For units ordered with intermediate electric heat, the second changeover switch is factory installed.

To protect the electric heat elements, an automatic and manual electric heat switch disengages the electric heat to prevent overheating. For information on resetting the manual switch, see Electric Heat Over-Temp Reset Button on page 15. For a typical wiring diagram, see Figure 53.

Electrical Connections

⚠ WARNING

A means for disconnect from electrical supply shall be provided according to NEC or local codes. Confirm that the power has been switched OFF before installing or servicing the unit.

Installation and maintenance must be performed only by qualified personnel who are familiar with local codes and regulations, and are experienced with this type of equipment. Wiring connection must be completed according to the wiring diagram on the unit. The unit must be GROUNDED. Installation of all field wiring must comply with NEC and local codes.

Line and voltage wiring must be done in accordance with local codes or the National Electrical Code, whichever is applicable.

Apply correct line voltage to the unit. Power to the unit must be sized correctly. Branch circuit overcurrent protection must be provided per local codes. See the data plate for correct ratings.

Standard Electrical Connection

Field electrical power connections are made in the electrical control box, which is mounted to the side of the chassis opposite the primary coil piping connections. See Figure 9. An optional disconnect switch is located in this box.

Units with an electric heat option that have the same voltage as the unit have single-point power connections and bring the power conductors into this same connection box through one of the knockouts. Units with electric heat that has a different voltage should bring the electric heat into one of the knockouts on the chase. See Figure 9.

If provided by the field, low voltage wires should be brought into a knockout located next to the electrical control box. See Figure 4.

Install a strain relief and pass the wires through the strain relief into the control box. Make the connections and reinstall the control box cover.

Figure 9: Electrical Power Connections

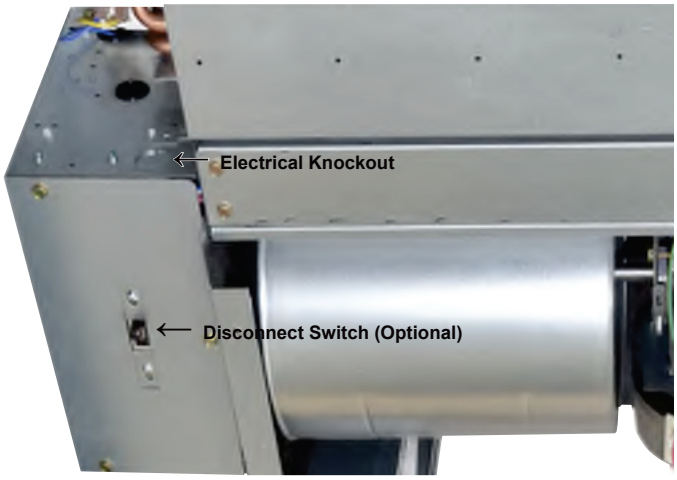

Bottom View

Electrical Data

The wiring diagram for the unit is attached to the exterior of the blower housing. See Figure 10. Be sure the available power is the same voltage and phase as that shown on the unit data plate. See Figure 3, for the location of the data plate. See page 44 through page 46 for typical wiring diagrams.

Figure 10: Location of the Wiring Diagram.

Operating Voltages

Operating voltages are as follows (+/– 10%).

- 115/60/1
- 208-230/60/1
- 265-277/60/1

NOTE: Voltages listed are to show voltage range. However, units operating with overvoltage and undervoltage for extended periods of time will experience premature component failure.

ECM Blower

If the unit is equipped with an ECM blower, additional steps may be required during the air balancing process. The ECM blower is controlled by a control board. Three-speed taps are provided with an ECM blower: high, medium and low.

The unit has been factory configured to produce PSC equivalent airflow on high speed, with medium speed at 80% and low speed at 60% of full volume. If these settings are acceptable, then no further configuring is necessary. If different speeds are required select a field adjustment ECM.

Figure 11: ECM Blower

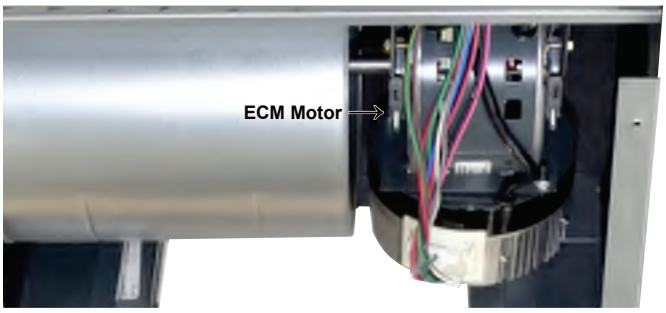

EC Motor Pin Out Locations

Figure 13 and Figure 14 show the pin locations for both connectors.

Figure 12: Connectors

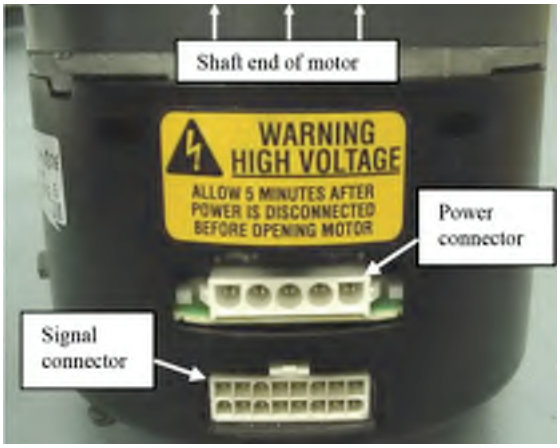

Figure 13: Power Connector

Power Connector

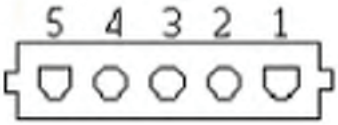

Pin	Description
1	JUMPER PIN 1 TO PIN 2 FOR
2	120 VAC LINE INPUT ONLY
3	CHASSIS GROUND
4	AC LINE
5	AC LINE

Figure 14: Signal Connector

Signal Connector

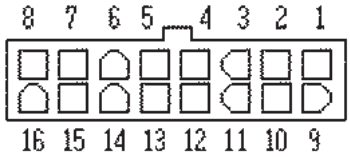

Pin	Description	Pin	Description
1	C1 - Common	9	O
2	W/W1 – High Speed	10	BK/PWM
3	C2 - Common	11	HEAT
4	DELAY	12	R- 24V
5	COOL	13	EM/W2- Super High
6	Y1 – Low Speed	14	Y/Y2 – Super Low
7	ADJUST	15	G – Medium Speed
8	OUT-	16	OUT+

Condensate Overflow Detection Device

The condensate overflow detection device is a factory-installed option on fan coils. This device has a condensate overflow switch with dry contacts and is connected to the LV board or MicroTech board. See Figure 15.

If you suspect it is not working properly, check to be sure that the float is installed straight up with the proper elevation. See Accessing/Removing the Main Fan Deck and Motor Assembly on page 20 for instructions on removing the main drain pan to access the device.

The condensate overflow switch needs to be wired to the proper controller (MicroTech for example) to shut off the fan if excessive water is present in the drain pan.

Figure 15: Condensate Overflow Switch Installation

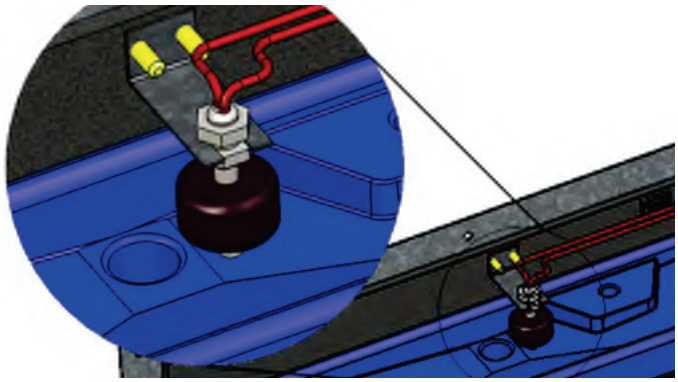

Decorative Trim Flange for Partially-Recessed Units

A fixed trim flange is used for partially-recessed fan coils (with height restrictions of 14.5 inches or below). Trim Flanges are also used with fan coils featuring a bottom discharge configuration.

The sheetrock location for the unit should be cut to the appropriate size, then framed with steel or wooden studs before the decorative trim flange is installed. See Figure 42 on page 38 for a sample illustration and recommended gaps.

DO NOT secure the Trim Flange without a stud frame to the drywall.

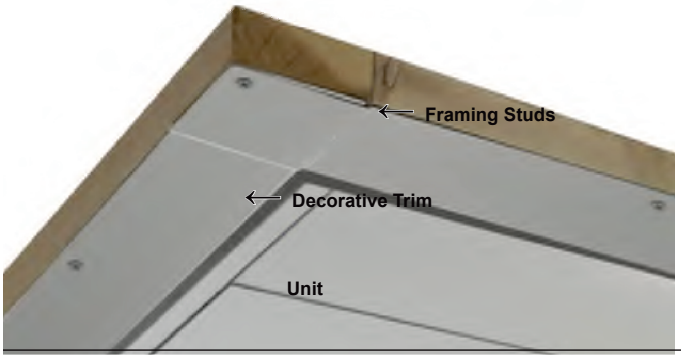

Electric Heat Over-Temp Reset Button

⚠ DANGER

PERSONAL INJURY HAZARD.

Power supply can cause electrical shock. Always disconnect power to unit before servicing.

The electric heat options comes with two over-temperature switches. The first resets automatically when the over-temperature condition no longer exists. The second, backup high limit switch must be reset manually.

NOTE: The need to reset the manual switch may indicate that there are improperly functioning system components. If the switch trips again, contact Daikin Service for help in diagnosing the cause.

To reset the manual switch, carry out the following steps:

1. Disconnect all power to the unit. Verify the power has been disconnected.
2. Remove the raceway access covers (see Accessing/Removing the Main Fan Deck and Motor Assembly on page 20).
3. Access and push in the red reset button in the raceway of the heater assembly. See Figure 17.
4. Reinstall the access cover.
5. Reconnect the power.

Figure 17: Electric Heat Over-Temp Reset Button Location

Cleaning & Flushing the Water System

CAUTION

Units must be checked for water leaks upon initial water system startup. Water leaks may be a result of mishandling or damage during shipping. Failure by the installing contractor to check for leaks upon start-up of the water system could result in property damage

- Prior to first operation of any unit, clean and flush the water circulating system of all construction dirt and debris.
- If units are equipped with water shutoff valves, either electric or pressure operated, connect the supply and return runouts together at each unit location. This will prevent the introduction of dirt into the unit. See Figure 18.
- Fill the system at the water makeup connection with all air vents open. After filling, close all air vents.
- Start the main circulator with the pressure reducing valve open.
- Check vents in sequence to bleed off any trapped air, ensuring circulation through all components of the system.
- While circulating water, check for any leaks in the unit and surrounding piping and repair as neccessary.
- Drains at the lowest point(s) in the system should be opened for initial flush and blow-down, making sure city water fill valves are set to make up water at the same rate.
- Check the pressure gauge at pump suction and manually adjust the makeup to hold the same positive steady pressure both before and after opening the drain valves.

Figure 18: Connections for flushing system piping

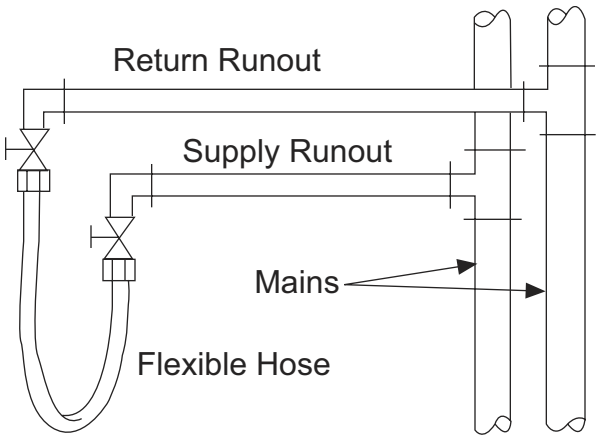

- *Flush should continue for at least two hours or longer until the drain water is clean and clear.
- Shut off the circulator pump and open all drains and vents to completely drain down the system.
- Short-circuited supply and return run outs should now be connected to the unit supply and return connections. Do not use sealers at the swivel flare connections of hoses.
- Refill the system with clean water.Test the water using litmus paper for acidity, and treat as required to leave the water slightly alkaline (pH 7.5 to 8.5).
- Antifreeze may also be added at this time. Use commercial grade antifreeze designed for HVAC systems only. Do not use automotive grade antifreeze. Antifreeze will have an effect on the performance of the unit.
- Once the system has been filled with clean water and antifreeze (if used), precautions should be taken to protect the system from contamination.

Venting Hydronic Coils

IMPORTANT

It is not Daikin's policy to make recommendations on what brand or type of water treatment is to be installed and used. It is the responsibility of the general contractor/owner to verify that the water supply to the units is free from contaminates, corrosive agents, chemicals and/or minerals. The general contractor/owner should contact a local water treatment company regarding water quality issues and treatment. A fouled water system will lead to premature component failure.

Hydronic coils require a vent, either manual or automatic, to release air from the unit. Primary coils on all ThinLine fan coils come standard with a coil air vent. It is located on the piping side of the unit, above the coil connections.

Secondary coils on ThinLine units are not equipped with an air vent, but one is included on all factory-supplied valve and piping packages. It is located on the pipe closest to the outlet coil connection. See Figure 18.

Perform the following steps to vent both primary and secondary coils after installing the unit:

- Pressurize the building piping system with water and vent any trapped air at system vents.
- For units with manual air vents, back the set screw out to expel air from the unit and then re-tighten the set screw.
- Automatic air vents should require no adjustment for the coil to vent. However, if the coil does not vent immediately, unscrew the outer portion of the fitting to expel air from the port. If debris has become trapped in the vent, completely remove the outer portion of the fitting and clean.

Equipment Start Up Check List

IMPORTANT

Fan coils must be filled with water before operating a circulating pump. Filling the system properly will result in immediate lubrication of the bearings. The pump bearings should not be allowed to operate dry.

Receiving and Inspection

☐ Unit received undamaged
☐ Unit received complete as ordered
☐ Parts for field installation received as ordered
☐ Unit arrangement/hand correct
☐ Unit structural support complete and correct

Handling and Installation

☐ Mounting grommets/isolators used
☐ Unit mounted level and square
☐ Proper access provided for unit and accessories
☐ Proper electrical service provided
☐ Proper overcurrent protection provided
☐ Proper service switch/disconnect provided
☐ Proper chilled water line size to unit
☐ Proper hot water line size to unit
☐ All services to unit in code compliance
☐ All shipping screws and braces removed
☐ Unit protected from dirt and foreign matter
☐ Install & connect parts for field installation

Cooling/Heating Connections

☐ Protect field-provided valve package components from heat
☐ Mount field-provided valve packages
☐ Connect field piping to unit
☐ Pressure test all piping for leaks
☐ Install drain line and traps, as required
☐ Insulate all piping, as required
☐ Install secondary drain pan under piping, as required

Ductwork Connections

☐ Install ductwork, fittings and grilles, as required
☐ Flexible duct connections at unit
☐ Proper supply and return grille type and size
☐ Control outside air for freeze protection
☐ Insulate all ductwork, as required

Electrical/Controls Connection

☐ Refer to unit wiring diagram
☐ Connect incoming power service or services
☐ Install and connect parts for field installation

Unit Start-up

☐ General visual unit and system inspection
☐ Check for proper fan rotation
☐ Record electrical supply voltage
☐ Check all wiring for secure connections
☐ Close all unit isolation valves
☐ Flush water systems
☐ Fill systems with water
☐ Vent water systems, as required
☐ All ductwork and grilles in place
☐ All unit panels and filters in place
☐ Start fans, pumps, chillers, etc.
☐ Check for overload conditions of all units
☐ Check all ductwork and units for air leaks
☐ Balance water systems, as required
☐ Balance air systems, as required
☐ Record all final settings for future use
☐ Check piping and ductwork for vibration
☐ Check all dampers for proper operation
☐ Verify proper cooling operation
☐ Verify proper heating operation
☐ Reinstall all covers and access panels
☐ Verify proper condensate drainage

General Maintenance

Normal maintenance on all units is generally limited to filter changes and cleaning the condensate drain pans. Units are provided with permanently lubricated motors and require no oiling.

Record performance measurements of volts, amps, and water temperature differences (both heating and cooling). A comparison of logged data with start-up and other annual data is useful as an indicator of general equipment condition.

Filter Changes

Filter changes are required at regular intervals. The time period between changes will depend upon the project requirements. Some applications, such as motels, produce a lot of lint from carpeting and linen changes, and will require more frequent filter changes. Units equipped with a MicroTech III board may have Change Filter indicator lights set to be activated at certain time intervals (60, 90 or 120 days). For units which were not provided with MicroTech board check filters at 60-day intervals for the first year until experience is acquired. If light cannot be seen through the filter when held up to sunlight or a bright light, it should be changed. A more critical standard may be desirable.

Filters can be removed without removing any panels. See Figure 19 or Figure 20. Cabinet units are equipped with large bottom access doors allowing easy access to the filter media from any direction.

A. **To remove the filter**

Bottom return:

1. Turn the tabs on the side of the filter frame.
2. Slide your fingers along the bottom of the filter until they reach the rear paperboard edge.
3. Pull the filter out of the unit.

Back return:

1. Turn the tabs on the bottom of the filter frame. Open the frame.
2. Feel for the paperboard edge of the filter. Slide the filter down and remove it.

C. **To install a new filter**

1. Bottom: Slide the filter in. Turn the tabs into place.
2. Back: Push the filter up until it clears the front lip on the filter housing, then turn the tabs into place.
3. Close the tabs of the filter frame.

Figure 19: Filter Removal for Units with Bottom Returns

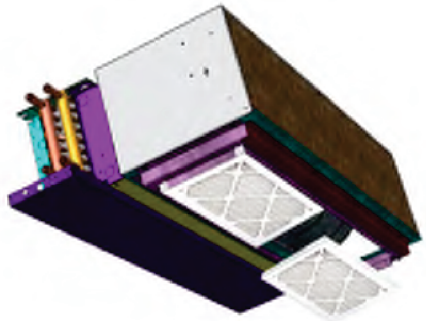

Figure 20: Filter Removal for Units with Rear Returns

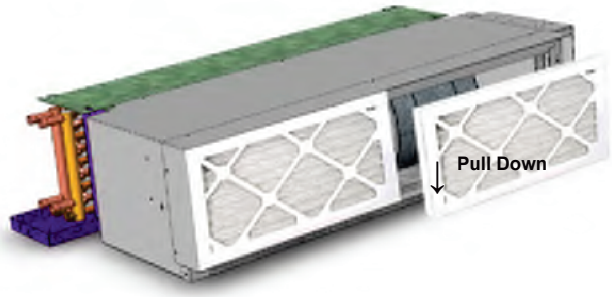

Coils

Units provided with the proper type of air filters, even when replaced regularly,may require periodic coil cleaning. Coils may be cleaned in-place by removing the motor/blower assemblies and brushing the entering air face with a soft brush in a parallel motion with the fins. Do not brush perpendicular to the fin orientation, damage may occur. Brushing should be followed by blowing air through the fins with a vacuum cleaner from the leaving air side then removing all debris with the vacuum.

Electric Resistance Heater Assembly

Electric resistance heaters typically require no periodic maintenance when the unit's air filters are changed properly. Other conditions and equipment in the system may affect the operation and service life of the heaters. The most important operating conditions for an electric heater is airflow and supply voltage. As a rule, Daikin recommends operating the electric heater on the High speed, never on Low. Restricted or insufficient airflow over the elements and/or high supply voltage to the elements will result in the unit overheating. This condition may result in the heater cycling on the high limit thermal cutout and premature failure of the heater.

Open-wire type heaters provided with ThinLine fan coils (see Figure 21) have an automatic reset switch with a back up high limit thermal switch. Automatic reset switches reset after the heater has cooled. High limit thermal switches must be manually reset. The high limit thermal cutout switch and automatic reset switch are only safety devices, not intended for continuous operation. With proper unit application and normal operation, the high limit thermal devices will not trip.

The need to reset the manual switches indicates there is a problem. Any conditions that causes high limit cutout MUST be corrected immediately. High supply voltage causes excessive amperage draw and may result in tripping the circuit breaker or blowing fuses on the incoming power supply.

Figure 21: Exposed Electric Heater Assembly

Condensate Drain Pans

The main and secondary condensate drain pans should be checked annually and cleaned and flushed as required. See Figure 22.

Figure 22: Primary and Secondary Drain Pans

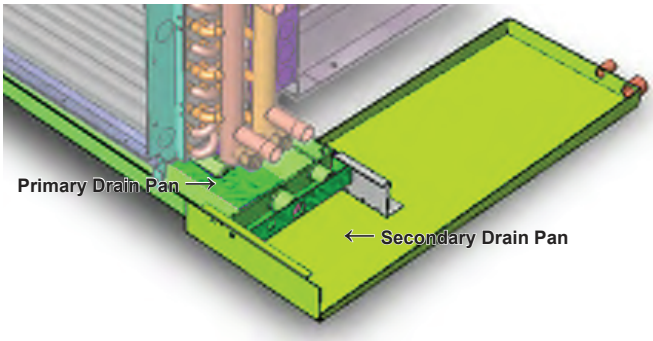

Accessing the Secondary Drain Pan

⚠ DANGER

Water coils exposed to freezing temperatures should be drained or anti-freeze should be added to the water circuit to avoid freezing.

To access the secondary drain pan (cabinet units), remove the side panel from the side of the unit where the main piping connections are made (this is opposite the control panel side).

Drain Pan

1. Remove the 4 detent pins from the drain pan and move the pan to a location for inspection and cleaning.
2. After inspection and cleaning, reinstall the drain pans by reversing the procedure in Step 1.

Figure 23: Drain Pan Attachment to Coil Section

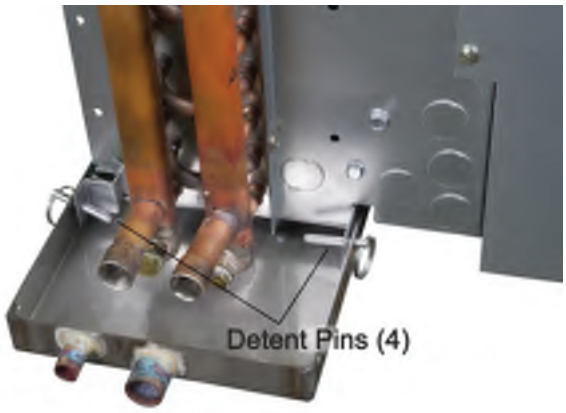

Blower

Dirt and dust should not be allowed to accumulate on the blower wheels or housing (see typical, Figure 24). Excessive debris can result in an unbalanced blower wheel condition which can damage the wheel and/or motor. The wheel and housing should be cleaned periodically using a brush and vacuum cleaner. Care must be taken to not dislodge the factory balancing weights on the blower blades.

Accessing/Removing the Main Fan Deck and Motor Assembly

Both the fan deck and the main condensate drain pan are easily removed for access and cleaning as follows.

Fan Deck:

1. Disconnect electrical power to the unit.
2. Remove the two screws that attach the fan deck to the chassis, see Figure 25 (on sizes 10 and 12 units, there are 4 screws to be removed).
3. Firmly grasp the fan deck and lift upward and off the unit. See Figure 26.
4. Disconnect the fan motor wiring harness by removing the plug where it attaches to the connector on the side of the chassis. See Figure 26.
5. To reinstall, follow these steps in reverse order.

NOTE: Push the tabs inward on the sides of the plug to free it from the connector base.

Monthly Intervals

- Inspect and clean the condensate drain pan to help avoid clogging of drainage by dirt, dust, etc. Inspect drainage piping for proper condensate flow.
- Check and clean the coil. Clean the coil with a low pressure water jet or low pressure air.
- Clean and tighten all the wiring connections.

Figure 24: Fan Housing

Figure 25: Removing Fan Deck Assembly

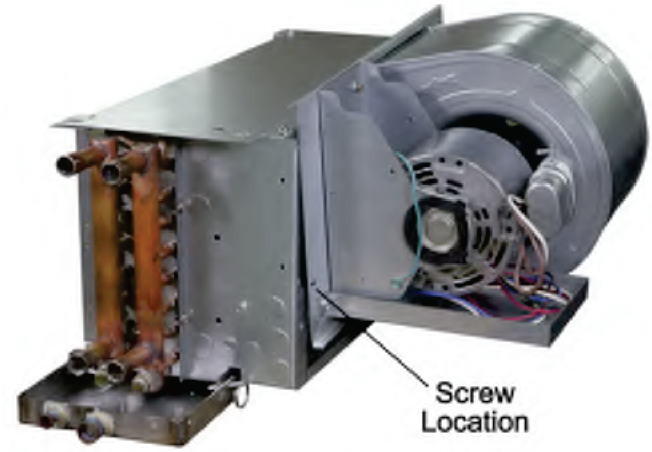

Figure 26: Unit Wiring Harness

Replacement Parts

Factory replacement parts should be used wherever possible to maintain the unit's performance, service life, operating characteristics and testing agency listings. Replacement parts may be purchased through a local Daikin sales representative.

Contact your local Daikin sales representative or Daikin Parts before attempting any unit modifications. Any modifications not authorized by Daikin could void all factory warranties and result in personal injury and/or unit damage.

When ordering replacement parts the following information must be supplied to ensure proper item identification:

1. Unit model number
2. Unit serial number
3. Unit orientation, hand connection (right or left hand when facing into the airstream)
4. Complete part description including any numbers

See replacement parts list for descriptions and part numbers. Contact Daikin for authorization of any returned parts, such as defective parts covered under warranty.

Controls

A wide variety of control options are available for Daikin ThinLine Horizontal Fan Coils, both unit-mounted and remote-mounted. This section provides a brief overview of these options and their operation. For more complete information, contact your Daikin representative.

3-Position Fan Switch with Manual ON-OFF

This three-speed fan switch (High, Med, Low) with ON-OFF option, shown at the right, is available as unit- or remote-mounted. It operates on low-voltage or line-voltage power and can be provided with a factory-mounted low-voltage interface board, which contains three-24 volt relays with line voltage contactors and terminal connections. The transformer is factory-installed and wired.

Sequence of operation

- *OFF:* Fan is turned OFF. The motorized fresh-air damper, when supplied, is closed .
- *High, Medium, Low:* Fan runs continuously at the selected speed. The two-position, motorized fresh-air damper, when supplied, is opened.

Low-Voltage (LV) Interface Board

The low-voltage interface board is used with any remote (wall mounted) Daikin thermostat or control. It can also be used in conjunction with a field-supplied controller of a building automation system (BAS) control where low voltage is needed to operate the fan coil. It is located in the control box for the unit (see Figure 27).

The LV interface board includes:

- Three 24-volt relays with line-voltage contactors to operate the fan motor speeds.
- Terminal connections for interfacing to:
  - An optional remote-mounted thermostat.
  - Low-voltage actuators for heating and cooling valves.
  - A return air sensor.
  - A pipe temperature sensor for changeover from heating to cooling on two-pipe systems.
- A factory-wired and installed transformer.

See Figure 27 for a list of connecting points to the board. For additional wiring information, see the typical wiring diagram Figure 52 on page 44 or the unit's wiring diagram, which is attached to the fan coil exterior. (see Figure 10 on page 13).

Figure 27: LV Interface Board 24 VAC connections

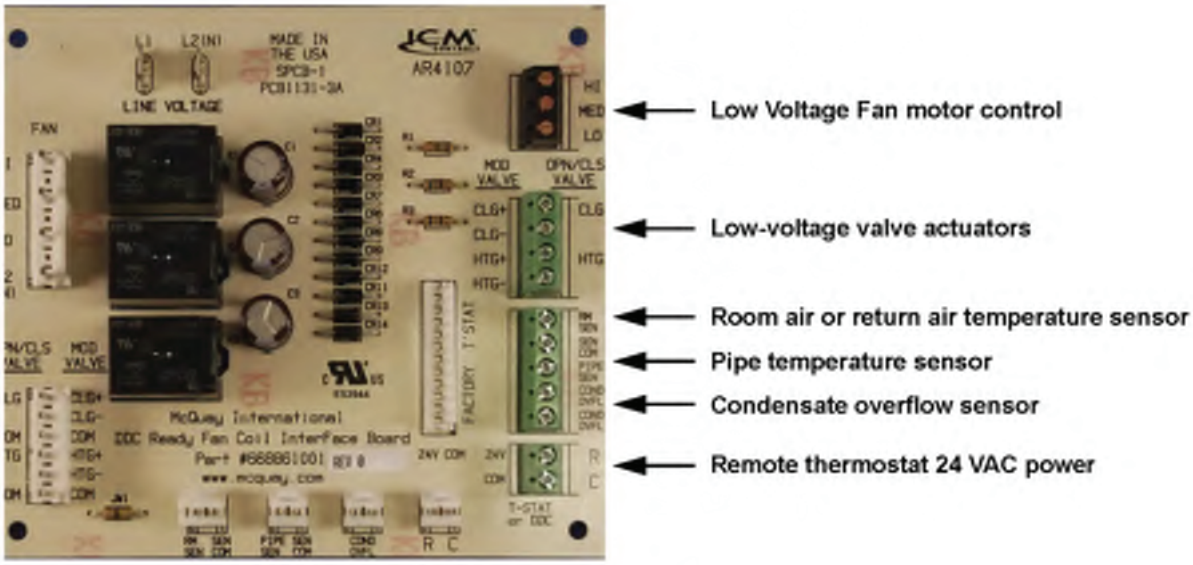

MT155 Thermostat

For more details refer to Addendum IM 1014 — MT155 on page 55. The MT155 series thermostat provides ON-OFF control for low-voltage or line-voltage valves and fan motors. This thermostat is designed as a remote-mount with connection to the LV interface board mounted on the fan coil unit. Options include manual or automatic changeover and three-speed fan control for continuous or cycling fan operation.

Figure 28: MT155 Thermostats

Two standard control options are available:

- *Continuous fan and ON-OFF* valve cycle operation: The thermostat cycles the valves on and OFF. The fan runs continuously at the manually selected fan speed.
- *ON-OFF fan and ON-OFF valve cycle operation:* The thermostat cycles the fan from the manually selected fan speed to OFF and it cycles the valves ON and OFF.

When the system switch is in the OFF position, the fan coil system including the fan is shut OFF.

TA155: A HEAT-OFF-COOL system switch manually selects heating or cooling mode (Addendum IM 1089 — MT155 A/B on page 59). In the HEAT position, only the heat output cycles with demand. In the COOL position, only the cool output cycles with demand. In the OFF position, heating and cooling outputs are off. Units with a two position system switch or without a system switch must use a load transfer switch when both heating and cooling outputs are used. This prevents control failure and equipment damage caused by direct cycling between loads.

TB155: An ON-OFF system switch enables auto-changeover of heating and cooling modes (Addendum IM 1089 — MT155 A/B on page 59). In the ON position the thermostat activates heating or cooling outputs dependant upon the relationship between set point and ambient temperature. Heat on to cool on dead band is 4°F. In the OFF position, heating and cooling outputs are OFF. Units without a system switch cycle between heating and cooling with a 4°F dead band.

FAN: Some units have a switch for manual selection of fan speed. On these units fan operation is either internally wired for fan continuous operation or is dependant upon connection to the fan supply input . When internally wired for fan continuous operation, the fan will be OFF when the system switch is OFF. When dependant upon external connections the fan may not be OFF with the system switch in the OFF position. The fan supply input is switched to fan speed outputs (HI-MED-LO).

Digital Thermostats

Daikin offers a broad range of remote, wall-mounted digital thermostats with the capability to control ON-OFF, 3-wire and proportional modulating valves and Normally-Closed or Normally-Open actuator valves. For more information, refer to Daikin publications ED 18513 and ED 18527.

MT158 and MT168 Thermostat-Controllers with Digital Display

For more details refer to Addendum IM 1089 — MT155 A/B on page 59, Addendum IM 1016 — MT158 B on page 67 and Addendum IM 1017 — MT168 on page 71. Series MT158 and MT168 microprocessor-based thermostat-controllers combine a proportional integral control algorithm with adaptive logic. They are remote-wall mounted.

Figure 29: MT158 and MT168 Thermostats

Heating and cooling outputs for the MT158 are individually configurable for three-wire floating control valves or ON/OFF valves in the Normally Open or Normally Closed modes.

Heating and cooling outputs for the MT168 provide 0-10 Vdc or 4-20 mA for proportional modulating valve control. The integrated, three-speed fan control switch is line voltage to allow direct connection to the fan motors. Manual or automatic changeover is provided with remote setback capability from a time clock or facility management system. Features include a Fahrenheit or Celsius digital display and a built-in purge cycle which assists the controller to determine if the system is supplying hot water or cooling.

Two standard control options are available:

- *Continuous fan and modulating (or ON-OFF) valve operation:* The fan runs continuously at the manually selected fan speed (high, medium or low). The controller modulates the valves or, on the MT158, dip-switches can be set to cycle the valves ON and OFF.
- *ON-OFF fan cycle operation and modulating (or ON-OFF) valve operation:* The controller cycles the fan from the manually selected fan speed to OFF. The controller modulates the valves or, on the MT158, dip-switches can be set to cycle the valves ON and OFF.

T170 Thermostat with Digital Display

Two thermostats are offered for remote installation only: TA170 for three-speed fan control and TB170 for staged fan operation. Both thermostats are used for ON-OFF control of low- or line-voltage valves with auto changeover. Detailed installation instructions and modes of operation can be found in Addendum IM 846 — MT170 on page 75.

Figure 30: T170 Thermostat with Digital Display

T180 Programmable Thermostat

Daikin offers two different 7-Day Programmable Digital Heating/Cooling Thermostat with constant fan or Fan cycled, ON/OFF Valve Control depending on the fan speed control. The thermostat interface contains buttons for use in navigation to accompanying menus/screens and for performing specific operations. Detailed installation instructions and modes of operation can be found in Addendum IM 1019 — MT180 on page 85.

Figure 31: T180 Thermostat with Digital Display

MicroTech III Controller

IMPORTANT

Units equipped with MicroTech III controllers should be used in conjunction with wall-mounted sensors only. Thermostats should not be used with MicroTech controllers.

ThinLine fan coils can be provided with unit-mounted MicroTech controllers and multiple unit- or room-mounted sensors.

MicroTech is a unit-mounted controller able to operate in either a stand-alone non-communicating environment or a communicating environment. To operate in a communicating environment, a board named *communication module*, is installed on the unit controller. There are two types of communication modules available with MicroTech controllers: LonWorks and BACnet MSTP.

Unit controllers and/or I-O expansion boards have inputs for room or return temperatures, temperature setpoint adjustments, fan speed switches, entering water temperatures, discharge air temperatures, changeover auto switches, low temperature detection, emergency shutdown detection, condensate overflow detection, dirty air filter detection and occupancy. All sensors are software selectable and the controller is configured based on the selection.

For units with factory installed MicroTech III controllers, please see OM 1111 for details.

Sensors

Room Temperature Sensor with Setpoint Adjustable Module and Fan Speed Control

The Digitally Adjustable sensor provides the ultimate of temperature control and display, simple user interface, alarm annunciation, and alarm reset. The easy to ready LCD clearly identifies the system operating mode including occupied/unoccupied mode, fan operation and control, unit status, timed override status, alarm annunciation, and energy savings mode through a series of recognizable icons. Tactile response buttons initiate adjustments for temperature set points, system mode, fan mode, occupancy, tenant override and fault reset functions. The large numeric LCD will display space temperature (°F or °C) with the corresponding setpoint conditions. This sensor is designed for use with BACnet or LonWorks applications. However, it can also be installed as a standalone sensor using factory default set points.

For detailed installation instructions and modes of operation see Addendum IM 1171 — Digitally Adjustable Display Sensor on page 92.

MicroTech III Wall-Mounted Room Temperature Sensor with Timed Override

MicroTech III Wall Mounted Room Temperature Sensors provide electronic sensing of room temperatures at wall locations. The sensor features a thermistor (10kO), a green LED for unit status and tenant override button.

Sensor Specifications

- Thermistor resistance (10kΩ) (Conforms to Advance Thermal Products curve 2)
- Ambient Temperature Limits:
  - Shipping and Storage: 40°F to 160°F (–40°C to 71°C)
  - Operating: 40°F to 140°F (4°C to 60°C)
- Locations: NEMA Type 1, Indoor only
- Connections: Color Coded Leads

Wiring

3-lead NEC Class II low voltage wiring.

NOTE:

1. Do not install the wire cables in the same conduit with power wiring.
2. Never apply external voltage of any type to any terminal or damage will result.
3. Do not exceed ratings of the device. This is a low voltage device:
4. Always use 22-gauge wire and never locate the room temperature sensor more than 250′ from the unit:

Wiring must be installed in accordance with the National Electrical Code and all local codes and ordinances, which can require the use of plenum rated cable or conduit.

Mounting Location

Locate the sensor on a wall where exposure to unrestricted air circulation represents the average temperature of the space. A common mistake is to mount the sensor too close to the supply air diffuser in a room. This causes short cycling of the air conditioning unit and large room temperature swings.

Installation

⚠ DANGER

THIS EQUIPMENT PRESENTS HAZARDS OF ELECTRICITY.

Failure to read and follow these instructions can result in property damage, severe personal injury or death.

⚠ CAUTION

Be certain that exposed portions of wires do not come in contact with each other.

1. Turn off power at the main service panel by removing the fuse or switching the appropriate circuit breaker to the OFF position.
2. To remove the cover on sensor 669529001, loosen two allen-wrench set screws located on the underside of the cover.
3. Place the wall sensor mounting base against the wall where the sensor where be located. Using the base as a template trace the mounting holes onto the wall.
4. Drill a 3/16" hole at each mounting hole mark.
5. Insert wall anchors into mounting holes and tap in to the wall surface.
6. Feed wires through the back of the sensor mounting base and align sensor mounting holes with wall anchors.
7. Use supplied screws to secure sensor base to wall.
8. Connect stripped, labeled wires to matching terminals on the temperature sensor. Refer to Figure 32 for wiring details.
9. Tighten screws on terminal connections. Gently tug wire to check for secure connections. Confirm that each wire is connected to the proper terminal.
10. Seal the hole where the wire enters through the wall behind the temperature sensor, with non-flammable insulation or putty.
11. Replace cover on wall temperature sensor by snapping it in place.
12. Turn on power to the system at the main service panel.
13. Test wall temperature sensor operation as described in “Testing”.

NOTE: Mount the sensor five feet above the floor. Do not mount the sensor on an outside wall, in direct sunlight, behind a door, or in an area affected by a vent or duct.

Utility Box Mounting of Sensor 669529001

1. Feed the cable from the utility box.
2. Strip 1/4–inch of insulation from the end of the wires.
3. Connect stripped, labeled wires to matching terminals on the temperature sensor base. See Figure 32.
4. Tighten screws on terminal connections. Gently tug wire to check for secure connections. Confirm that each wire is connected to the proper terminal.
5. Neatly store excess wire back inside the utility box.
6. Mount the sensor base to the utility box using two 6-32 × 5/8–inch flat head sheet metal screws provided with the sensor.
7. Replace cover on wall temperature sensor by attaching the catches at the top of the cover to the top tabs on the sensor base. Secure the cover to the base by tightening the two allen wrench set-screws on the bottom of the sensor cover. Do not overtighten.

NOTE: Sensor 669529001 has two allen wrench set-screws on the underside of the sensor cover to secure it in place. Do not overtighten.

Wiring

Figure 32: Temperature Sensor Wiring to MicroTech III Unit Controller

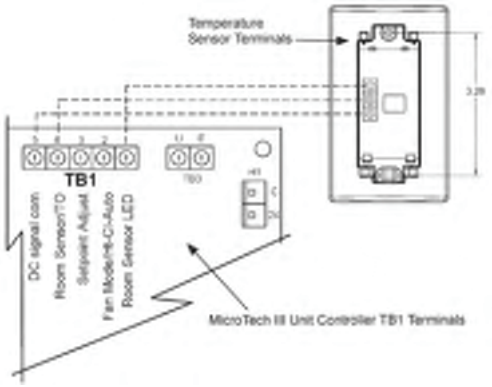

Cool Test

1. Using the building automation system (BMS), adjust room cooling setpoint to 5 degrees below room temperature.
2. Air conditioning should come on within five (5) minutes. Status indicator may come on.
3. Using the BMS, adjust the set temperature 2 degrees above the room temperature and the A/C should turn off. There may be a fan delay on your system.

Heat Test

1. Using the building automation system (BMS), adjust room heating setpoint to 5 degrees above room temperature.
2. Heating should come on within five (5) minutes. Status indicator may come on.
3. Using the BMS, adjust the set temperature 2 degrees above the room temperature and the A/C should turn off. There may be a fan delay on your system.

Timed Override

Press Override button for more than 3 but less than 10 seconds and Unit will return to Occupied operation until the override time expires (as programmed in BMS).

Figure 33: MicroTech III Room Temperature Wall Sensor with Timed Override

Troubleshooting

Symptom	Remedy
No LED illuminated	Check for 5 VDC at sensor, LED is dark when 5 VDC is not present
Unit turns on and off too frequently	Sensor must be located as described in " Mounting Location".

The fresh air damper module with top or rear fresh air inlets is available for concealed, recessed or exposed units. Fresh Air Damper control can be automated or manual. Automatic options include a 2-position control or a full economizer option (MicroTech controller only).

Manual Damper – The manual damper is field-adjustable to allow a zero to 25 percent fresh air position.

Auto Two-Position Damper – The auto two-position damper is factory set at 25 percent when open. The damper can be set in the field to allow a zero to 50 percent fresh air position.

Economizer Damper – The economizer damper is accompanied by a factory-installed and wired modulating actuator. The damper is factory set at 25 percent default minimum and 100 percent maximum opening. The damper is field adjustable using MicroTech III to allow a zero to 100 percent fresh air.

Figure 34: Factory Installed Dampers

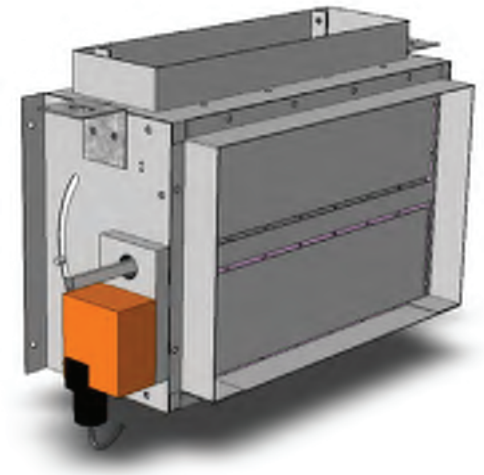

Unit Data

Table 1: Physical Data: Coils, Fans, Motors and Filters

	Size 02	Size 03	Size 04	Size 06	Size 08	Size 10	Size 12
Primary Coil Data							
Face Area, ft^2 (cm^2)	1.08 (1004)	1.08 (1004)	1.43(1323)	2.11(1962)	2.46(2281)	3.14(2917)	3.83(3559)
Fins/inch (cm)	12 (4.7)	12 (4.7)	12 (4.7)	12 (4.7)	12 (4.7)	12 (4.7)	12 (4.7)
Connection Size	1/2" Nominal Copper (5/8" OD)						
Coil Dimensions							
2-Row L × D × H, in (cm)	17.3 × 1.7 × 9 (43.9 × 4.4 × 22.9)	17.3 × 1.7 × 9 (43.9 × 4.4 × 22.9)	22.8 × 1.7 × 9 (57.9 × 4.4 × 22.9)	33.8 × 1.7 × 9 (85.9 × 4.4 × 22.9)	39.3 × 1.7 × 9 (99.8 × 4.4 × 22.9)	50.2 × 1.7 × 9 (127.6 × 4.4 × 22.9)	61.3 × 1.7 × 9 (155.7 × 4.4 × 22.9)
3-Row L × D × H, in (cm)	17.3 × 2.6 × 9 (43.9 × 6.6 × 22.9)	17.3 × 2.6 × 9 (43.9 × 6.6 × 22.9)	22.8 × 2.6 × 9 (57.9 × 6.6 × 22.9)	33.8 × 2.6 × 9 (85.9 × 6.6 × 22.9)	39.3 × 2.6 × 9 (99.8 × 6.6 × 22.9)	50.2 × 2.6 × 9 (127.6 × 6.6 × 22.9)	61.3 × 2.6 × 9 (155.7 × 6.6 × 22.9)
4-Row L × D × H, in (cm)	17.3 × 1.7 × 9 (43.9 × 8.8 × 22.9)	17.3 × 3.5 × 9 (43.9 × 8.8 × 22.9)	22.8 × 3.5 × 9 (57.9 × 8.8 × 22.9)	33.8 × 3.5 × 9 (85.9 × 8.8 × 22.9)	39.3 × 3.5 × 9 (99.8 × 8.8 × 22.9)	50.2 × 3.5 × 9 (127.6 × 8.8 × 22.9)	61.3 × 3.5 × 9 (155.7 × 8.8 × 22.9)
Coil Volume, Gal (Liters)							
2-Row	0.19 (0.7)	0.19 (0.7)	0.24(.9)	0.32(1.2)	0.37(1.4)	0.46(1.7)	0.55(2.1)
3-Row	0.26 (1.0)	0.26 (1.0)	0.32(1.2)	0.45(1.7)	0.52(2.0)	0.64(2.4)	0.77(2.9)
4-Row	0.34 (1.3)	0.34 (1.3)	0.43(1.6	0.61(2.3)	0.70(2.6)	0.87(3.3)	1.05(4.0)
Secondary Coil Data: 1-Row Standard Capacity, Hot Water or Steam							
Face Area, ft^2 (cm^2)	0.61(567)	0.61(567)	0.84(780.1)	1.3(1208)	1.5(1421)	1.99(1845)	2.44(2267)
Fins/inch (cm)	12 (4.7)	12 (4.7)	12 (4.7)	12 (4.7)	12 (4.7)	12 (4.7)	12 (4.7)
L × D × H, in (cm)	14.7 × .86 × 6 (37.3 × 2.2 × 15.2)	14.7 × .86 × 6 (37.3 × 2.2 × 15.2)	20.2 × .86 × 6 (51.3 × 2.2 × 22.9)	31.2 × .86 × 6 (79.2 × 2.2 × 22.9)	36.7 × .86 × 6 (93.2 × 2.2 × 22.9)	47.7 × .86 × 6 (121.1 × 2.2 × 22.9)	58.7 × .86 × 6 (149.0 × 2.2 × 22.9)
Coil Volume, Gal (Liters)	0.06 (0.23)	0.06 (0.23)	0.08 (0.30)	0.11 (0.42)	0.12 (0.45)	0.15 (0.57)	0.18 (0.70)
Secondary Coil Data: 1-Row High Capacity, Hot Water or Steam							
Face Area, ft^2 (cm^2)	0.82 (762)	0.82 (762)	1.26 (1171)	1.73 (1607)	2.04 (1895)	2.65 (2460)	3.26 (3029)
Fins/inch (cm)	12 (4.7)	12 (4.7)	12 (4.7)	12 (4.7)	12 (4.7)	12 (4.7)	12 (4.7)
L × D × H, in (cm)	14.7 × .86 × 8 (37.3 × 2.2 × 20.3)	14.7 × .86 × 8 (37.3 × 2.2 × 20.3)	20.2 × .86 × 8 (51.3 × 2.2 × 22.9)	31.2 × .86 × 8 (79.2 × 2.2 × 22.9)	36.7 × .86 × 8 (93.2 × 2.2 × 22.9)	47.7 × .86 × 8 (121.1 × 2.2 × 22.9)	58.7 × .86 × 8 (149.0 × 2.2 × 22.9)
Coil Volume, Gal (Liters)	0.08 (0.30)	0.08 (0.30)	0.11 (0.42)	0.14 (0.53)	0.16 (0.61)	0.20 (0.76)	0.24 (0.92)
Fan/Motor Data							
Fan Quantity	1	1	2	2	2	4	4
Motor Quantity	1	1	1	1	1	2	2
Filter Data							
1" (25.4 cm) Media	Throwaway (MERV 4), MERV 7*, MERV 13* and Aluminum Washable						
Quantity	1	1	1	1	1	2	2
Hideaway cm L × D × H, in. ()	10.50 × 1.00 × 8.75 (26.6 × 2.5 × 22.2)	10.50 × 1.00 × 8.75 (26.6 × × 2.5 × 22.2)	16.00 × 1.00 × 8.75 (40.6 × 2.5 × 22.2)	27.21 × 1.00 × 8.75 (69.1 × 2.5 × 22.2)	32.71 × 1.00 × 8.75 (83.1 × 2.5 × 22.2)	21.81 × 1.00 × 8.75 (55.4 × 2.5 × 22.2)	27.31 × 1.00 × 8.75 (69.3 × 2.5 × 22.2)
Cabinet L × D × H, in. (cm)	15.63 × 1.00 × 10.89 (39.7 × 2.5 × 27.6)	15.63 × 1.00 × 10.89 (39.7 × 2.5 × 27.6)	21.00 × 1.00 × 10.89 (53.3 × 2.5 × 27.6)	32.13 × 1.00 × 10.89 (81.6 × 2.5 × 27.6)	39.25 × 1.00 × 10.89 (81.7 × 2.5 × 27.6)	24.38 × 1.00 × 10.89 (61.9 × 2.5 × 27.6)	30.00 × 1.00 × 10.89 (76.2 × 2.5 × 27.6)

* For use with ECM only

Shipping Weights

*Table 2: Approximate Shipping Weights - lbs (kg)**

Unit Type	Unit Size						
	S02	S03	S04	S06	S08	S10	S12
FCHC/FCHR	108 (49)	110 (50)	124 (56)	139 (63)	151 (69)	184 (84)	196 (89)
FCHH	30 (14)	33 (15)	35 (16)	45 (20)	55 (25)	62 (28)	65 (30)

Note: *Approximate dry weights do not include plenums, valve packages, hot water coils, electric heaters or other options.

Unit Dimensions

Figure 35: Dimensions – Hideaway Fan Coil, Front Discharge – Free Return

Reheat coil shown

Top View

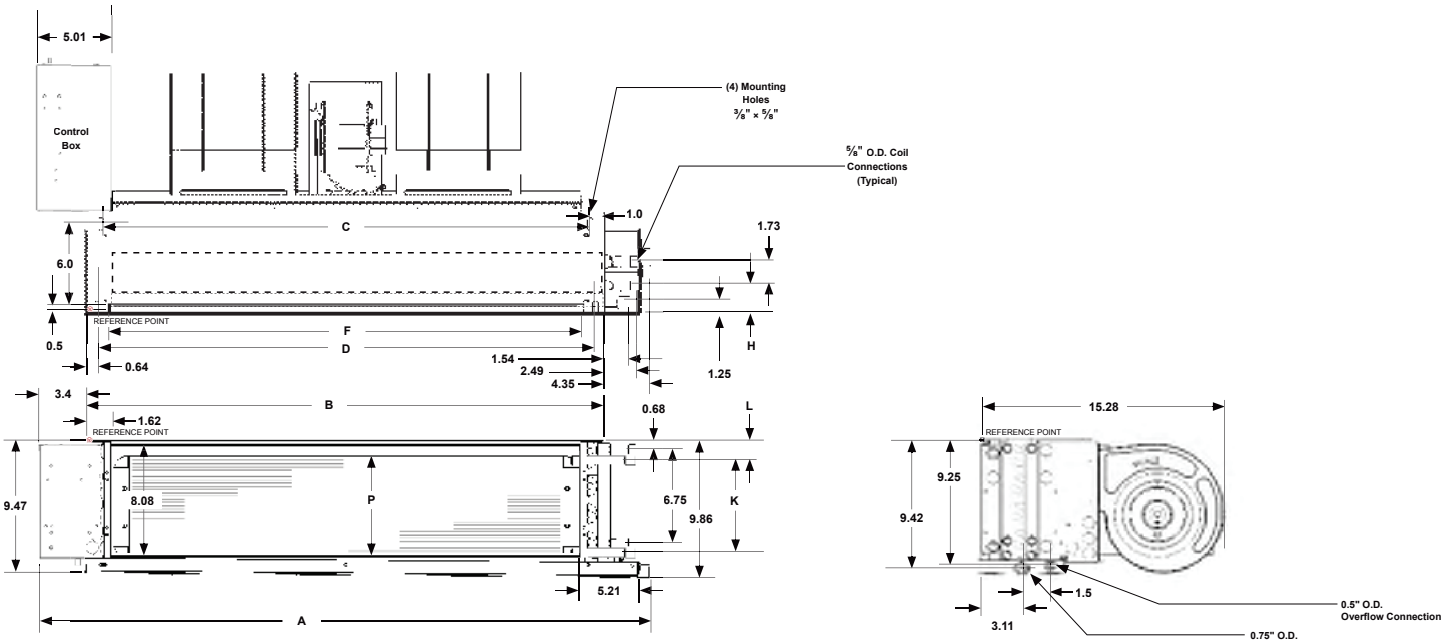

Front View **Side View**

Dimension		S02	S03	S04	S06	S08	S10	S12
		inch (mm)	inch (mm)	inch (mm)	inch (mm)	inch (mm)	inch (mm)	inch (mm)
Overall Unit Width	A	28.48 (723)	28.48 (723)	33.98 (863)	44.98 (1142)	50.48 (12.82)	61.48 (1562)	72.48 (1841)
Chassis Width	B	20.63 (524)	20.63 (524)	26.13 (664)	37.13 (943)	42.63 (1083)	53.63 (1362)	64.63 (1641)
Mounting Hole Distance (Rear)	C	18.64 (473)	18.64 (473)	24.14 (613)	35.14 (892)	40.64 (1032)	51.64 (1312)	62.44 (1702)
Mounting Slot Location (Front)	D	19.35 (491)	19.35 (491)	24.85 (631)	35.85 (911)	41.35 (1050)	52.35 (1330)	63.35 (1609)
Discharge Opening - Width	F	17.39 (442)	17.39 (442)	22.84 (581)	33.89 (867)	39.39 (1000)	50.39 (1280)	61.39 (1559)
Primary Coil Location	H	1.81 (46) for 2- or 3-row primary coil; 2.81 (71) for 4-row primary coil						
Secondary Coil - Standard Capacity	L	2.86 (73)						
Secondary Coil - High Capacity	L	0.86 (22)						
Secondary Coil - Standard Capacity	K	5.0 (127)						
Secondary Coil - High Capacity	K	7.0 (178)						

Figure 36: Dimensions – Hideaway Fan Coil With Plenum, Front Discharge – Rear Return

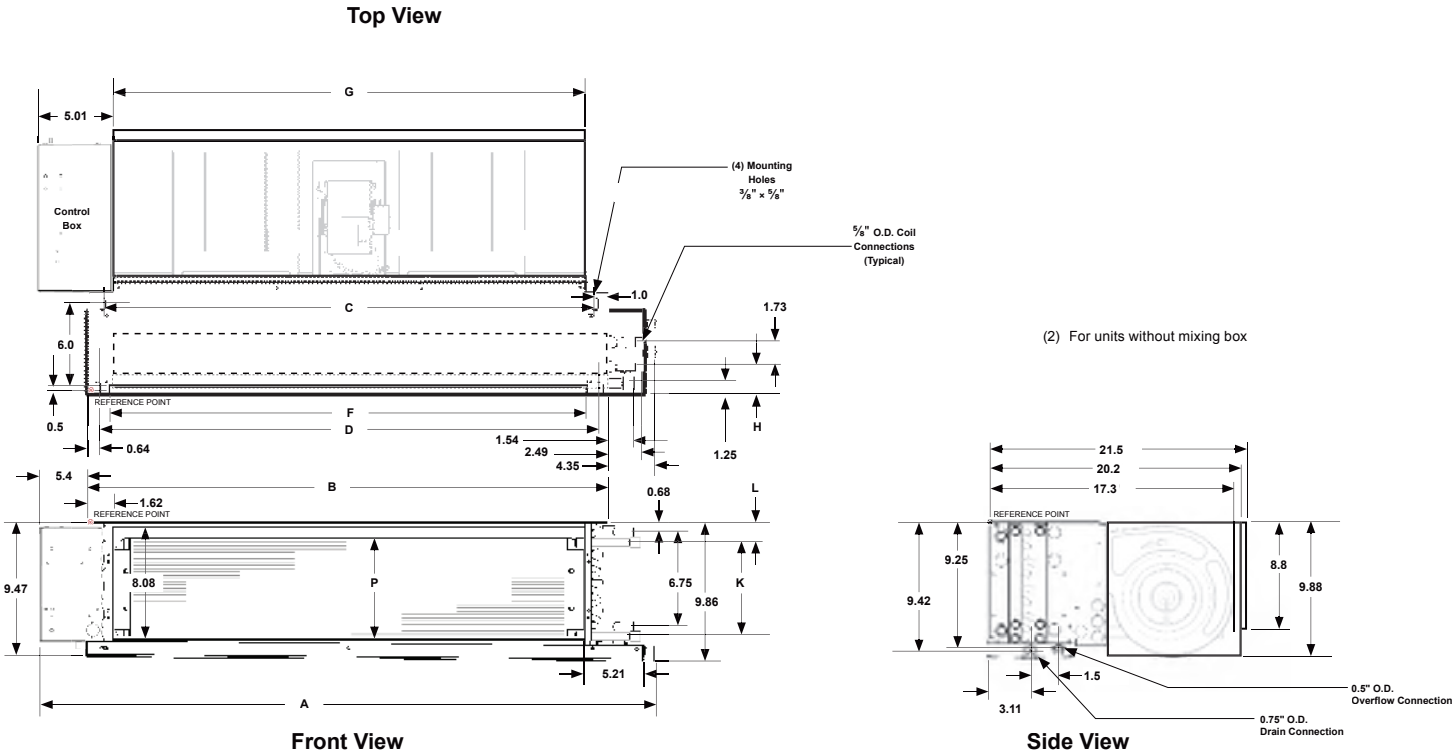

Dimension		S02	S03	S04	S06	S08	S10	S12
		inch (mm)	inch (mm)	inch (mm)	inch (mm)	inch (mm)	inch (mm)	inch (mm)
Overall Unit Width	A	30.48 (771)	30.48 (771)	35.98 (944)	46.98 (1193)	52.48 (1333)	63.48 (1612)	74.48 (1892)
Chassis Width	B	20.63 (524)	20.63 (524)	26.13 (664)	37.13 (943)	42.63 (1083)	53.63 (1362)	64.63 (1641)
Mounting Hole Distance (Rear)	C	18.64 (473)	18.64 (473)	24.14 (613)	35.14 (892)	40.64 (1032)	51.64 (1312)	62.44 (1702)
Mounting Slot Location (Front)	D	19.35 (491)	19.35 (491)	24.85 (631)	35.85 (911)	41.35 (1050)	52.35 (1330)	63.35 (1609)
Discharge Opening - Width	F	17.39 (442)	17.39 (442)	22.84 (581)	33.89 (867)	39.39 (1000)	50.39 (1280)	61.39 (1559)
Plenum/Return Air Opening - Width	G	21.5 (546)	21.5 (546)	27.0 (686)	38.0 (965)	43.5 (1105)	54.5 (1384)	65.5 (1664)
Primary Coil Location	H	1.81 (46) for 2- or 3-row primary coil; 2.81 (71) for 4-row primary coil						
Secondary Coil - Standard Capacity	L	2.86 (73)						
Secondary Coil - High Capacity		0.86 (22)						
Secondary Coil - Standard Capacity	K	5.0 (127)						
Secondary Coil - High Capacity		7.0 (178)						

Figure 37: Dimensions – Hideaway Fan Coil With Plenum, Front Discharge – Bottom Return

Top View

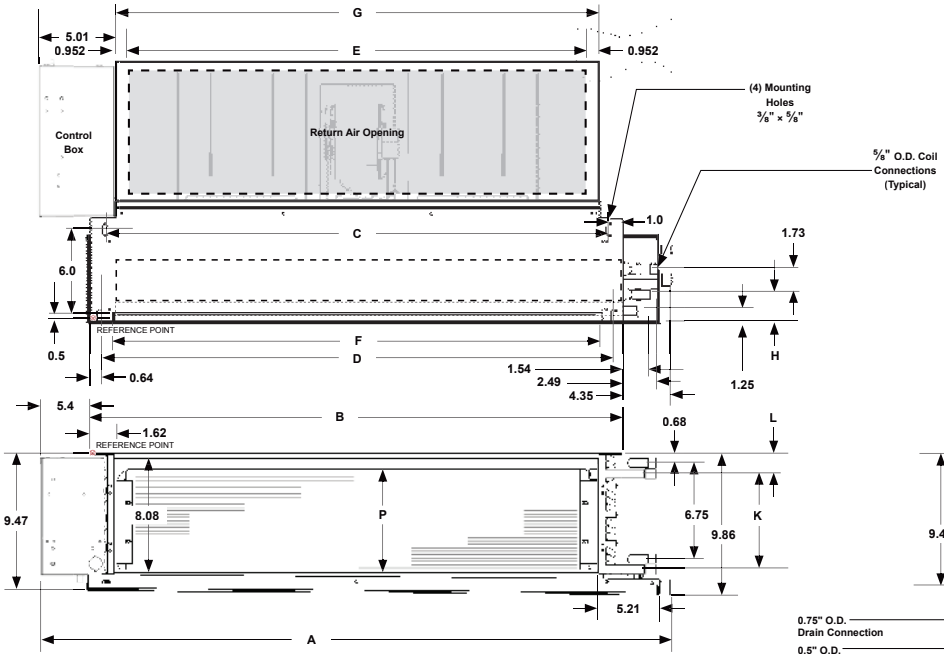

Front View

NOTES: (1) Secondary drain pan is only supplied with factory-provided piping packages

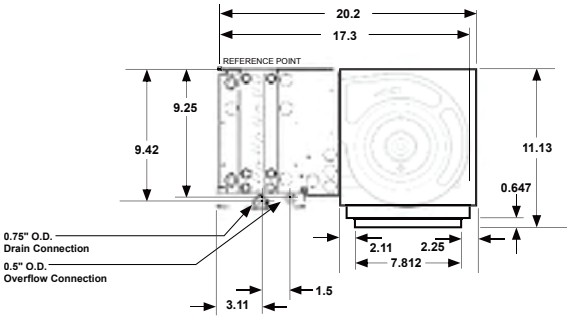

Side View

Dimension		S02	S03	S04	S06	S08	S10	S12
		inch (mm)	inch (mm)	inch (mm)	inch (mm)	inch (mm)	inch (mm)	inch (mm)
Overall Unit Width	A	30.48 (771)	30.48 (771)	35.98 (944)	46.98 (1193)	52.48 (1333)	63.48 (1612)	74.48 (1892)
Chassis Width	B	20.63 (524)	20.63 (524)	26.13 (664)	37.13 (943)	42.63 (1083)	53.63 (1362)	64.63 (1641)
Mounting Hole Distance (Rear)	C	18.64 (473)	18.64 (473)	24.14 (613)	35.14 (892)	40.64 (1032)	51.64 (1312)	62.44 (1702)
Mounting Slot Location (Front)	D	19.35 (491)	19.35 (491)	24.85 (631)	35.85 (911)	41.35 (1050)	52.35 (1330)	63.35 (1609)
Return Air Opening - Width	E	17.7 (450)	17.7 (450)	23.2 (589)	34.2 (869)	39.7 (1008)	50.7 (1288)	61.7 (1567)
Discharge Opening - Width	F	17.39 (442)	17.39 (442)	22.84 (581)	33.89 (867)	39.39 (1000)	50.39 (1280)	61.39 (1559)
Plenum Width	G	21.5 (546)	21.5 (546)	27.0 (686)	38.0 (965)	43.5 (1105)	54.5 (1384)	65.5 (1664)
Primary Coil Location	H	1.81 (46) for 2- or 3-row primary coil; 2.81 (71) for 4-row primary coil						
Secondary Coil - Standard Capacity	L	2.86 (73)						
Secondary Coil - High Capacity	L	0.86 (22)						
Secondary Coil - Standard Capacity	K	5.0 (127)						
Secondary Coil - High Capacity	K	7.0 (178)						

Figure 38: Dimensions – Cabinet Fan Coil, Front Discharge – Rear Return

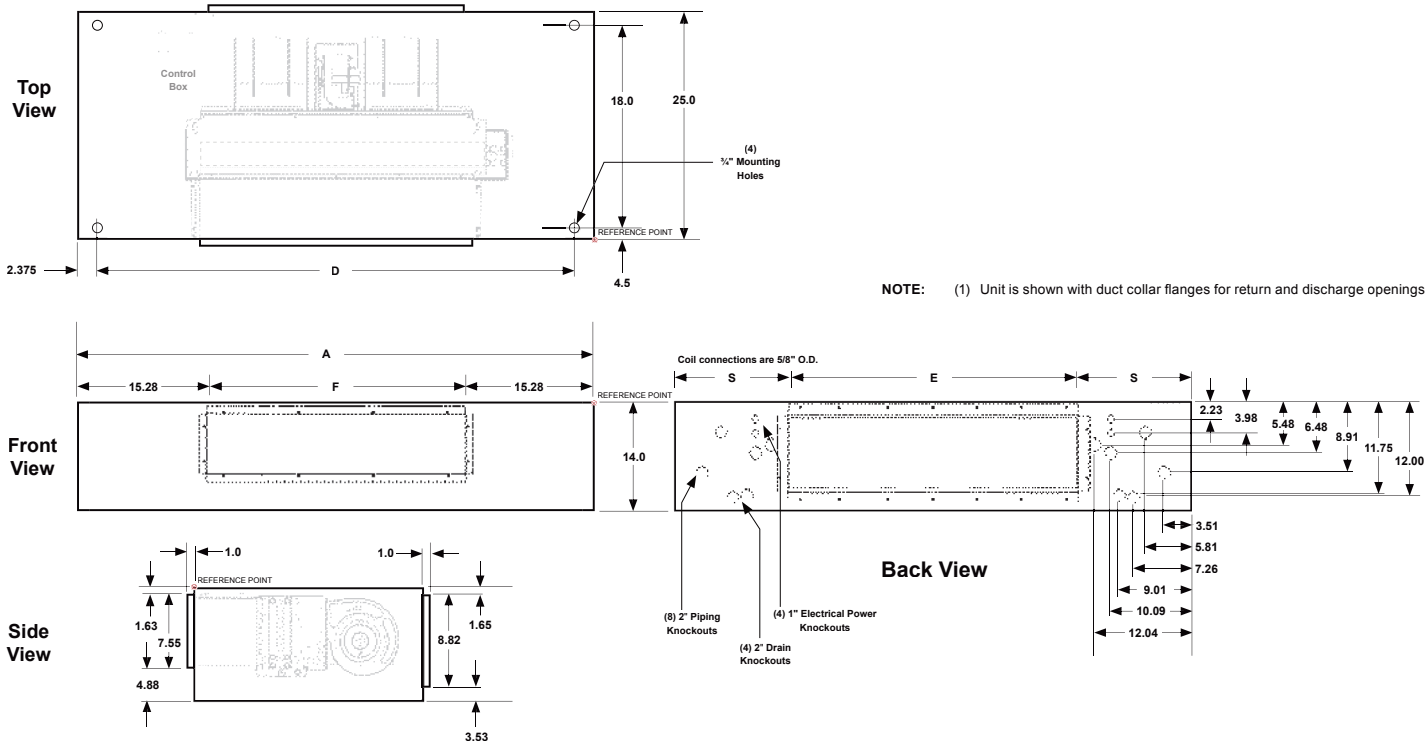

Dimension		S02	S03	S04	S06	S08	S10	S12
		inch (mm)	inch (mm)	inch (mm)	inch (mm)	inch (mm)	inch (mm)	inch (mm)
Overall Unit Width	A	47.64 (1210)	47.64 (1210)	53.14 (1350)	64.14 (1629)	69.64 (1769)	80.63 (2048)	91.64 (2328)
Mounting Hole Distance	D	40.64 (1032)	40.64 (1032)	46.14 (1172)	57.14 (1451)	62.64 (1591)	73.64 (1870)	84.64 (2150)
Return Air Opening - Width	E	19.0 (483)	19.0 (483)	22.9 (581)	34.5 (876)	38.4 (975)	50.0 (1270)	61.6 (1565)
Discharge Opening - Width	F	17.09 (434)	17.09 (434)	22.59 (574)	33.59 (853)	39.09 (993)	50.09 (1272)	61.09 (1552)
Return Air Opening Location	S	14.32 (364)	14.32 (364)	15.13 (384)	14.82 (376)	15.63 (397)	15.32 (389)	15.01 (381)

Figure 39: Dimensions – Cabinet Fan Coil, Front Discharge – Bottom Return

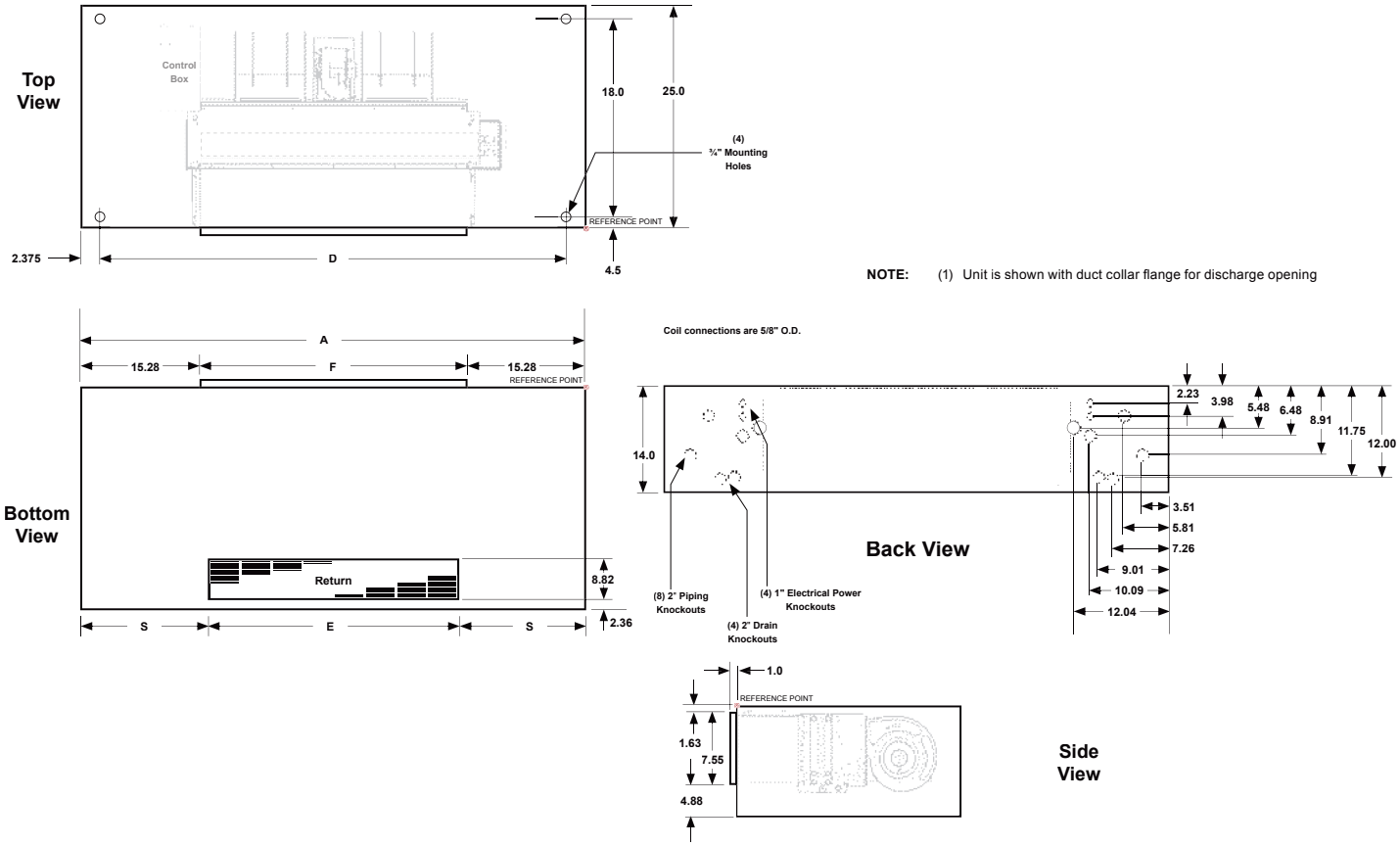

Dimension		S02	S03	S04	S06	S08	S10	S12
		inch (mm)	inch (mm)	inch (mm)	inch (mm)	inch (mm)	inch (mm)	inch (mm)
Overall Unit Width	A	47.64 (1210)	47.64 (1210)	53.14 (1350)	64.14 (1629)	69.64 (1769)	80.63 (2048)	91.64 (2328)
Mounting Hole Distance	D	40.64 (1032)	40.64 (1032)	46.14 (1172)	57.14 (1451)	62.64 (1591)	73.64 (1870)	84.64 (2150)
Return Air Opening - Width	E	18.5 (470)	18.5 (470)	22.88 (581)	34.5 (876)	38.38 (975)	50.0 (1270)	61.63 (1565)
Discharge Opening - Width	F	17.4 (442)	17.4 (442)	22.98 (588)	33.59 (853)	39.39 (1001)	50.39 (1280)	61.09 (1552)
Return Air Opening Location	S	14.57 (370)	14.57 (370)	15.13 (384)	14.82 (376)	15.63 (397)	15.32 (389)	15.01 (381)

Figure 40: Dimensions – Cabinet Fan Coil, Bottom Discharge – Rear Return

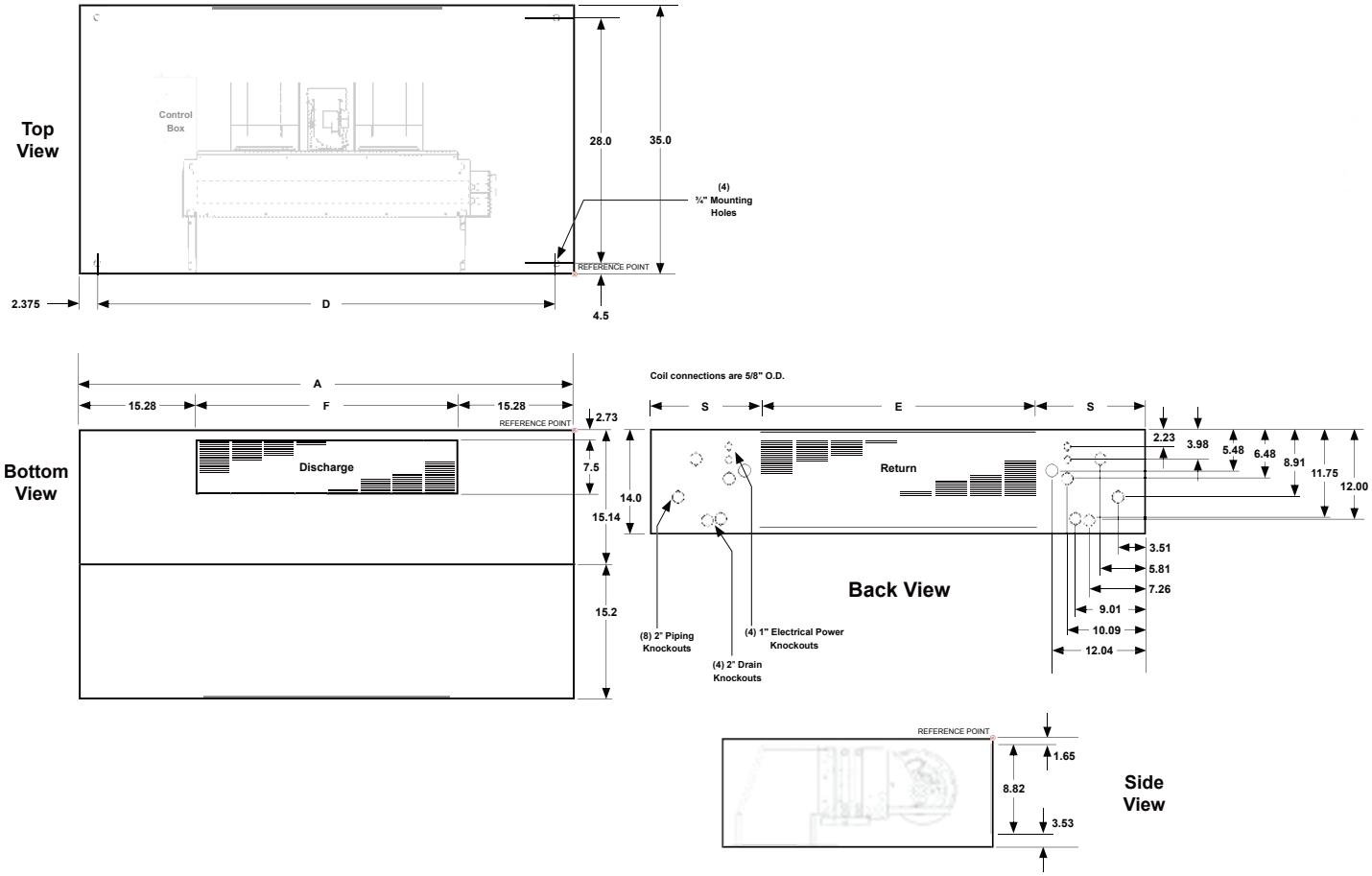

Dimension		S02	S03	S04	S06	S08	S10	S12
		inch (mm)	inch (mm)	inch (mm)	inch (mm)	inch (mm)	inch (mm)	inch (mm)
Overall Unit Width	A	47.64 (1210)	47.64 (1210)	53.14 (1350)	64.14 (1629)	69.64 (1769)	80.63 (2048)	91.64 (2328)
Mounting Hole Distance	D	40.64 (1032)	40.64 (1032)	46.14 (1172)	57.14 (1451)	62.64 (1591)	73.64 (1870)	84.64 (2150)
Return Air Opening - Width	E	16.22 (412)	16.22 (412)	21.7 (552)	32.72 (831)	38.22 (971)	49.22 (1250)	60.22 (1530)
Discharge Opening - Width	F	17.09 (434)	17.09 (434)	22.59 (574)	33.59 (853)	39.09 (993)	50.09 (1272)	61.09 (1552)
Return Air Opening Location	S	14.32 (364)	14.32 (364)	15.13 (384)	14.82 (376)	15.63 (397)	15.32 (389)	15.01 (381)

Figure 41: Dimensions – Cabinet Fan Coil, Bottom Discharge – Bottom Return

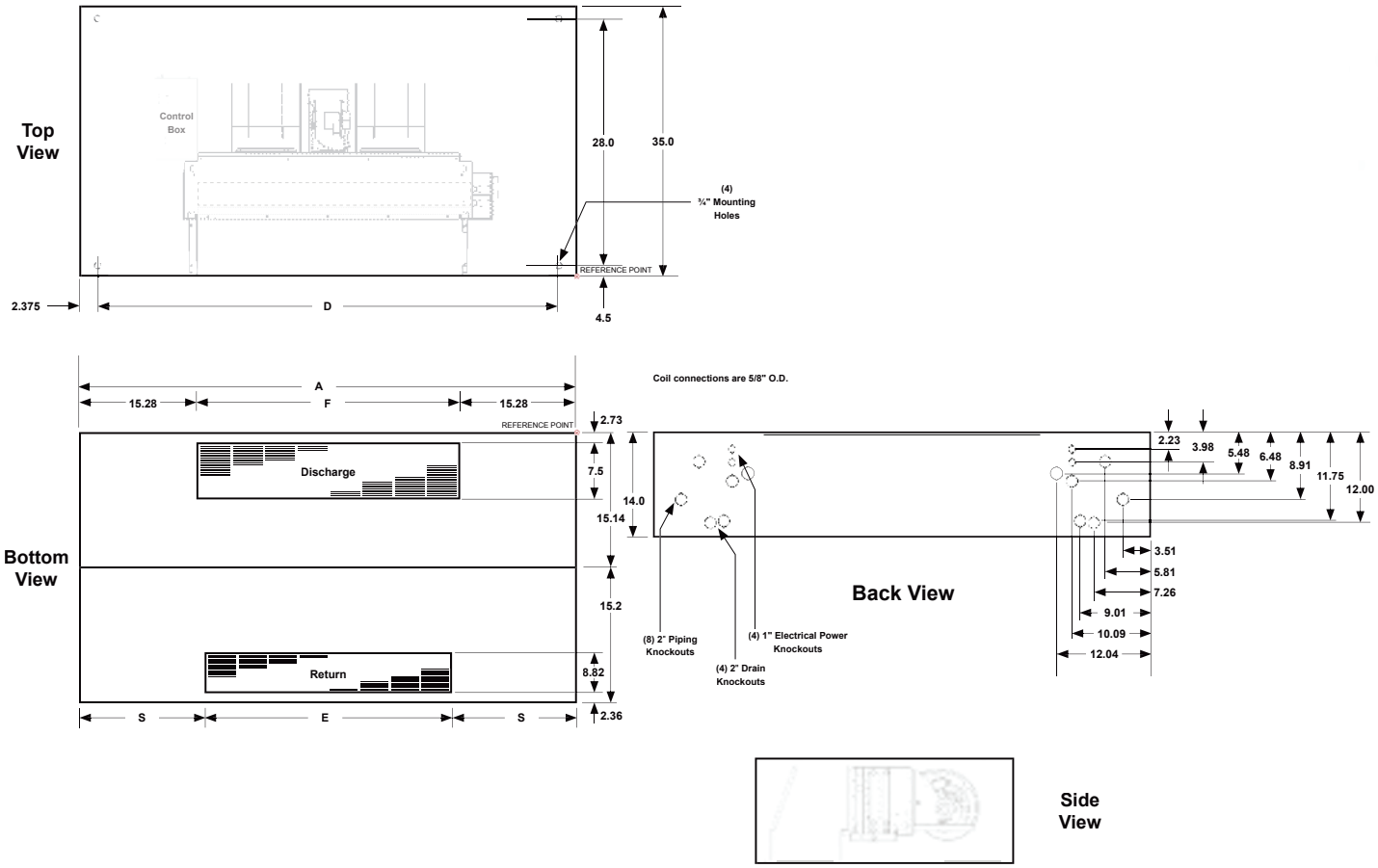

Dimension		S02	S03	S04	S06	S08	S10	S12
		inch (mm)	inch (mm)	inch (mm)	inch (mm)	inch (mm)	inch (mm)	inch (mm)
Overall Unit Width	A	47.64 (1210)	47.64 (1210)	53.14 (1350)	64.14 (1629)	69.64 (1769)	80.63 (2048)	91.64 (2328)
Mounting Hole Distance	D	40.64 (1032)	40.64 (1032)	46.14 (1172)	57.14 (1451)	62.64 (1591)	73.64 (1870)	84.64 (2150)
Return Air Opening - Width	E	16.22 (412)	16.22 (412)	21.7 (552)	32.72 (831)	38.22 (971)	49.22 (1250)	60.22 (1530)
Discharge Opening - Width	F	17.09 (434)	17.09 (434)	22.59 (574)	33.59 (853)	39.09 (993)	50.09 (1272)	61.09 (1552)
Return Air Opening Location	S	14.32 (364)	14.32 (364)	15.13 (384)	14.82 (376)	15.63 (397)	15.32 (389)	15.01 (381)

Figure 42: Dimensions – Recessed Cabinet Fan Coil with Ceiling Plate

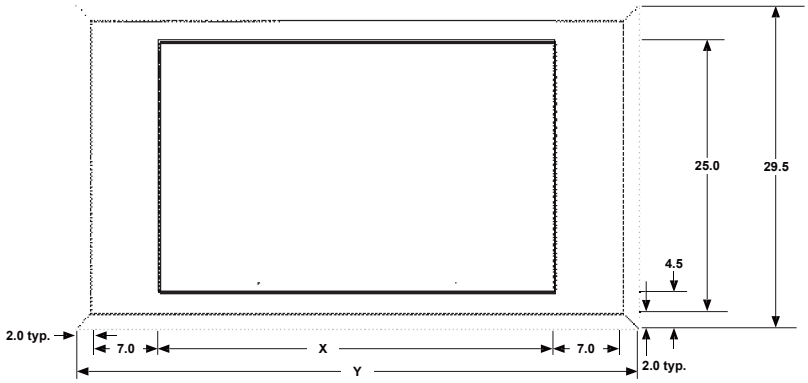

Bottom View

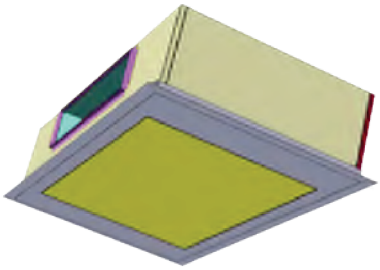

Side View

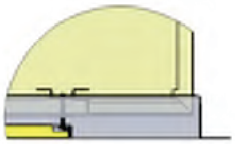

Detail A

Plate to cabinet connection for fully recessed units

Figure 43: Dimensions – Trim Flange Mount

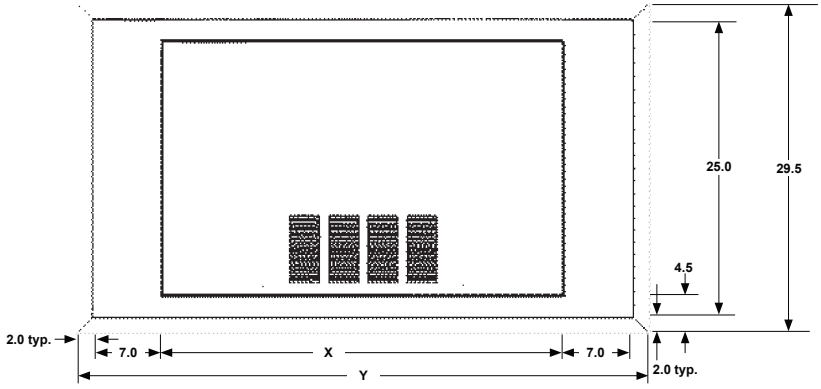

Bottom View

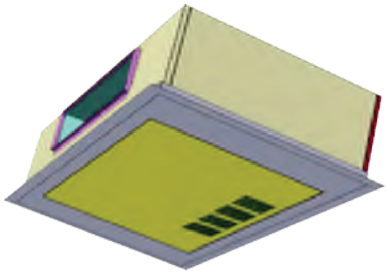

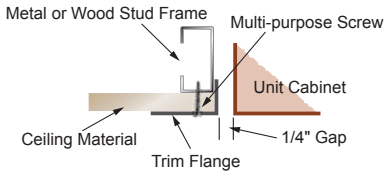

Trim Flange Securing Detail

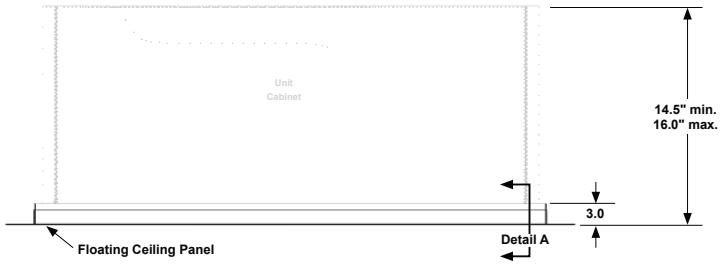

Side View

Factory-Installed Valve and Piping Packages

Factory valve and piping packages are available for both two-pipe and four-pipe systems with either right or left hand connections. Four-pipe systems can be configured with the heating and cooling connections on the same or opposite sides of the unit. Packages can be either factory-installed or factory-assembled and shipped loose with the unit. All factory-assembled packages are fully leak tested. Units are also available without valve and piping packages in either a right-hand or left-hand configurations.

Factory-installed packages are soldered to the coil and wired to the unit control box, MicroTech controller or LV Interface Board. For field-installed packages, chilled and hot water pipes are the only field connections required. Piping is 1/2" nominal copper (5/8" OD).

Figure 44: Four-Pipe Deluxe Valve and Piping Package

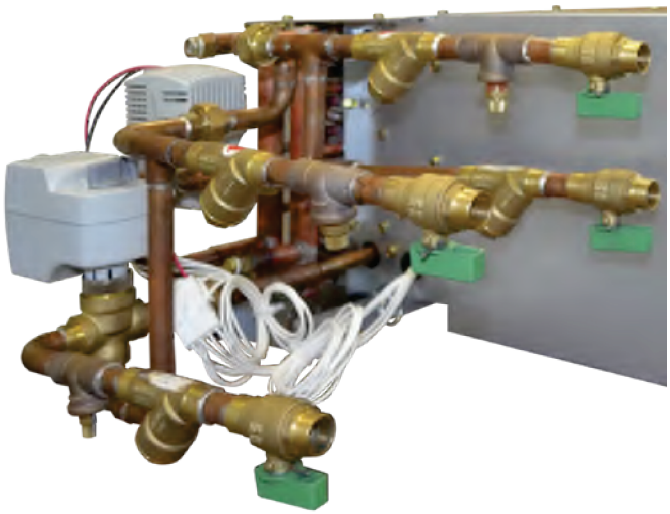

Pre-determined field connection points are located for easy access. The installing contractor can pre-pipe the building water connections before the units arrive on the jobsite. A label clearly identifies chilled and hot water connection points on every unit.

All chilled water piping and components are located to allow condensate to drain into the secondary drain pan supplied with the valve package. Insulation of the factory piping package is not required.

Available Packages

All factory-installed valve packages are flexible, configurable and fully software-selectable in our Daikin Tools™ selection program. Custom valve packages are available also. Numerous piping packages are available to match design configurations. Additional components can be added to meet exact requirements, including P/T ports, unions, and flexible stainless steel hoses.

Shut-Off Only Packages

Shut-Off Only piping packages provide interconnecting copper piping and shut-off ball valves for ease in connecting supply and return lines to the unit. Four-pipe packages include a venting valve for the preheat or reheat coil. Primary coils on all units have an integral venting valve.

Figure 45: Shut-Off Only Package

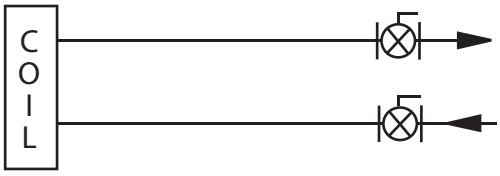

(See Figure 50 for components key)

Basic Packages

Basic valve and piping packages add control valves to the Shut-Off Only package. All Daikin control valves are factory-mounted in the supply water pipe. See Control Valve Options on page 41 for more information on the variety of control valves available.

Figure 46: Basic Package

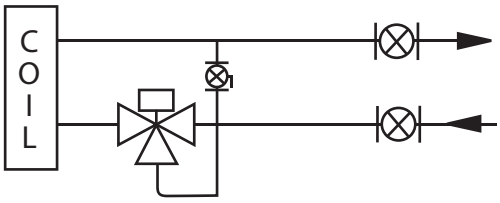

(See Figure 50 for components key)

Enhanced Packages

Enhanced valve and piping packages add a strainer to the Basic package supply water pipe. The strainer body is cast brass construction with a stainless steel mesh that is easy to remove for cleaning.

Figure 47: Enhanced Package

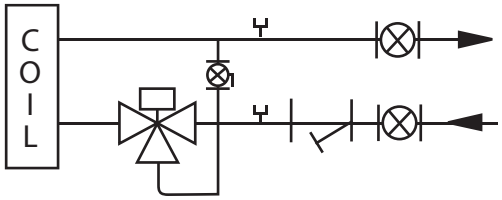

(See Figure 50 for components key)

Premium Packages

Premium valve and piping packages replace the Basic package a ball valve in the return line with a manual or automatic circuit setter. The manual circuit setter is also known as a manual flow control valve. The auto circuit setter acts as both a flow setting device and a shut-off valve. It allows water flow through the fan coil to be set quickly and accurately. The circuit setter includes a cartridge within the valve body that is sized to allow a specific flow rate through the coil without any action required by a system piping balancer.

P/T ports are included, which are used to measure the temperature or pressure drop across the valve. This pressure drop can be compared to factory supplied tables that relate the pressure drop to a specific flow rate. The manual circuit setter valve also has a memory stop so that the correct setting can be found quickly.

Figure 48: Premium Package

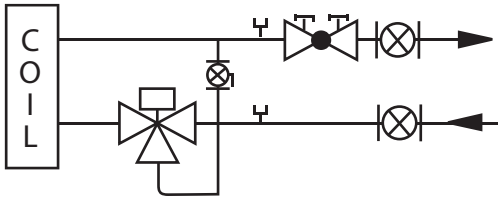

(See Figure 50 for components key)

Deluxe Packages

Deluxe valve and piping packages add a strainer to the Premium package. The strainer is available with or without an optional draining (blow-off) valve.

Figure 49: Deluxe Package

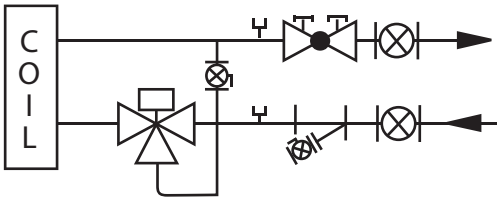

(See Figure 50 for components key)

Figure 50: Components Key for Schematics

		Manual Shutoff Ball Valve: Water shut-off. Handle rotates 90 degrees.
		Manual Shutoff Ball Valve with Memory Stop: Used on return line for limiting water flow.
		2-Way, N.C., On/Off Valve, Spring Return: Turn On or Off water flow to the coil in response to 24V or line voltage signal
		3-Way, N.C., On/Off Valve, Spring Return: Bypass water flow away from coil in response to 24V or line voltage signal. Includes fixed orifice for balancing.
MD		**2-Way Modulating Valve (3-wire or proportional):** Modulates water flow in response to 24V signal.
MD		**3-Way Modulating Valve (3-wire or proportional):** Modulates or bypass water flow in response to 24V signal. Includes fixed orifice for balancing.
		PT Port: For connecting a pressure or temperature gauge.
		Y-Strainer: Removable screen filters out small particles from supply line during normal system operation.
		Manually Adjustable Circuit Setter with Shutoff: Pressure-dependent, ball-type, manual flow control.
		Cartridge-Type, Auto-Fixed Circuit Setter: Pressure-compensated, automatic fixed-flow control.
		Union: For easy removal of piping from coil.
		Bypass Balancing Valve: Adjustable balancing of water flow through the bypass circuit on a 3-way control valve.

Note: Daikin 3-way valves are equipped with a fixed balance orifice in the bypass line, eliminating the need for a separate balancing valve

Control Valve Options

Except for Shut-off Only packages, all valve and piping packages include control valves for controlling water flow. All Daikin control valves are factory assembled and mounted in the supply water pipe downstream of the coil. Several options are available:

Two-Way Two-Position Valves

These valves will be either Fully-Open or Fully-Closed in response to a line voltage (115, 208-230 or 265-277 VAC) or 24 VAC signal from the Daikin thermostat or MicroTech controller. Some means of relieving pump head pressure should be applied when two-way valves are selected. Normally-Open or Normally-Closed valves are available, both spring-return type.

Three-Way Two-Position Valves

These valves either allow full water flow through the coil or divert the flow through a bypass line. The valves respond to a line voltage (115, 203-230 or 265-277 VAC) or to 24 VAC signal from the Daikin thermostat or MicroTech controller. All standard three-way valves come with a fixed-balance orifice in a bypass line to compensate for flow balancing in the bypass position, eliminating the need for an additional balancing valve. Normally-Open or Normally-Closed valves are available.

Two-Way Modulating Valves

These valves modulate the water flow through the coil in response to a signal from the Daikin thermostat or controller. Standard Daikin modulating valves are three-wire floating point valves. Zero to 10 VDC equal percentage proportional valves are also available. The modulating valves are factory mounted in the supply water pipe upstream of the coil. Daikin modulating valves are failed-in-place type.

Three-Way Modulating Valves

These valves modulate water flow through a coil in response to a signal from a Daikin thermostat or controller. Three-way valves allow water that is directed through the coil to mix with water that is directed through the bypass line. This mixture exits through the leaving water pipe. Modulating valves are three-wire, floating-point valves or 0-10 VDC equal percentage proportional. The modulating valves are factory mounted in the supply water pipe upstream of the coil. Daikin modulating valves are failed-in-place type.

Selecting Correct Size Modulating Valves

Daikin Tools software automatically selects the best modulating valve size for the unit and coil being considered. By combining the ARI performance data, the coil flow rate and the DP across the water coil, the water coil Cv is calculated and the best matching modulating port size is selected. Valve and piping packages can easily be configured and automatically selected using Daikin Tools.

NOTE: MicroTech controllers do not currently support 0-10 VDC Proportional valves.

Figure 51: Factory-installed Valve & Piping Packages (right-hand shown)

Connecting Pipe Locations: 2-Pipe Cooling or Heating

Deluxe Package shown

Front View

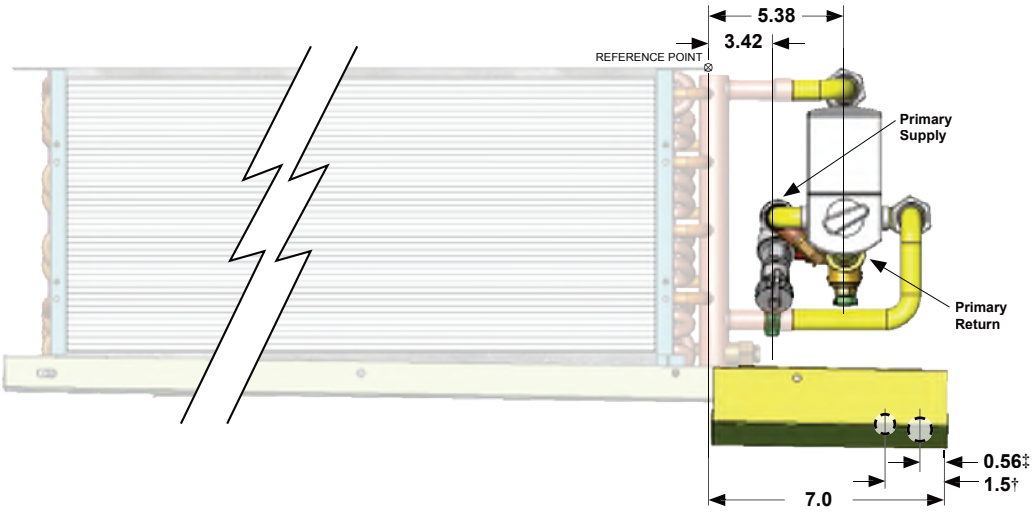

End View

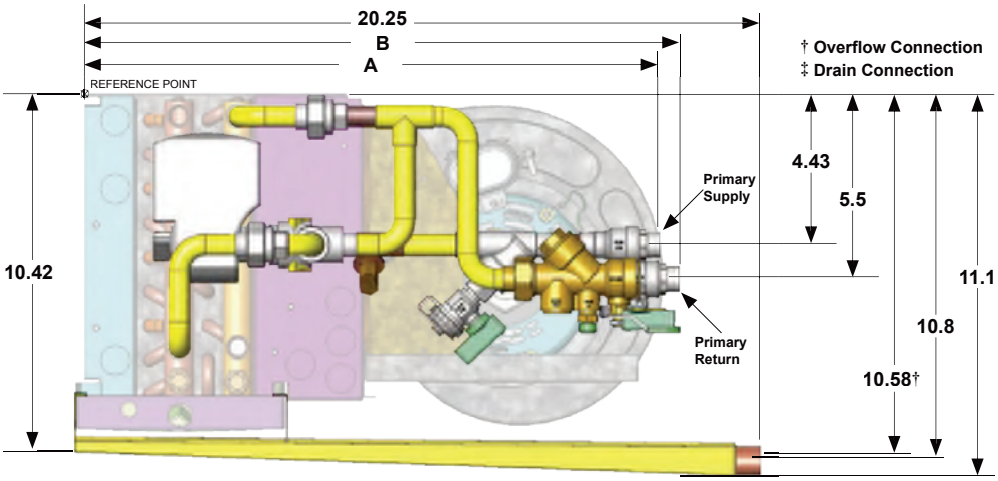

Name	Component Description	Primary Package Connections from Reference Point (2- & 3-row Coil)	
		Supply (A)*	Return (B)*
Basic 2W	2Way control valve, shut-off valves	12.2	16.2
Basic 3W	3Way control valve, shut-off valves	12.2	17.0
Enhanced 2W	2Way control valve, shut-off valves, strainer	15.8	16.3
Enhanced 3W	3Way control valve, shut-off valves, strainer	15.8	17.0
Premium 2W, auto flow	2Way control valve, shut-off valves, auto flow-setter	12.3	15.8
Premium 2W, manual flow	2Way control valve, shut-off valves, manual flow-setter	12.3	16.6
Premium 3W, auto flow	3Way control valve, shut-off valves, auto flow-setter	12.2	14.8
Premium 3W, manual flow	3Way control valve, shut-off valves, manual flow-setter	12.2	15.6
Deluxe 2W, auto flow	2Way control valve, shut-off valves, strainer, auto flow-setter	15.8	15.8
Deluxe 2W, manual flow	2Way control valve, shut-off valves, strainer, manual flow-setter	15.8	16.6
Deluxe 3W, auto flow	3Way control valve, shut-off valves, strainer, auto flow-setter	12.2	14.8
Deluxe 3W, manual flow	3Way control valve, shut-off valves, strainer, manual flow-setter	12.2	15.6

NOTE: For 4-row Primary Coils add 1" to the dimensions A and B shown

Figure 51 continued: Factory-installed Valve & Piping Packages (right-hand shown)

Connecting Pipe Locations: 4-Pipe Cooling and Heating, Same-side

Deluxe Package shown

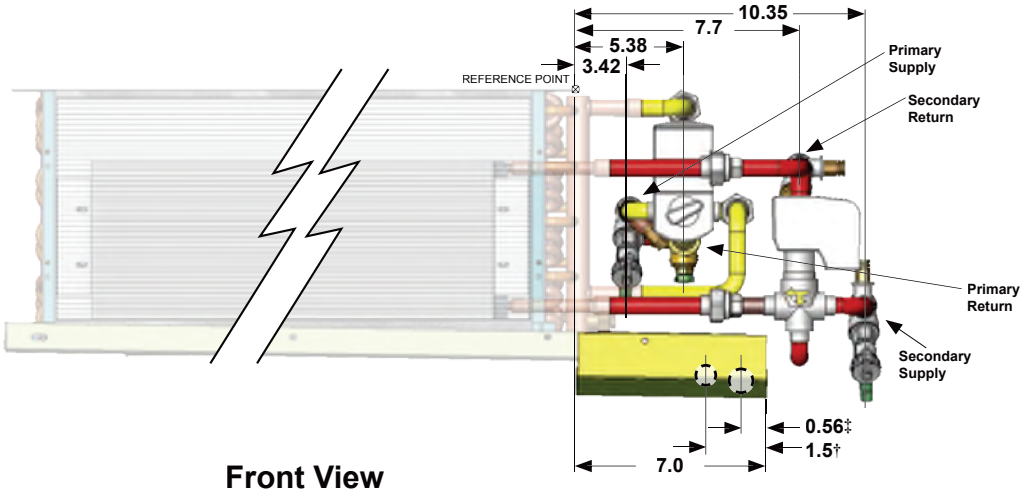

Front View

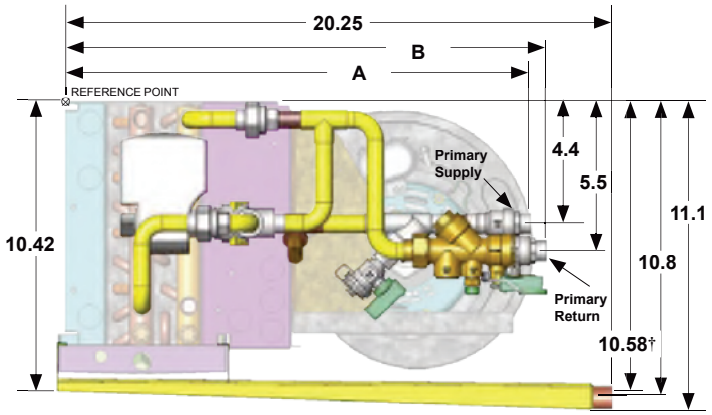

Primary Piping End View

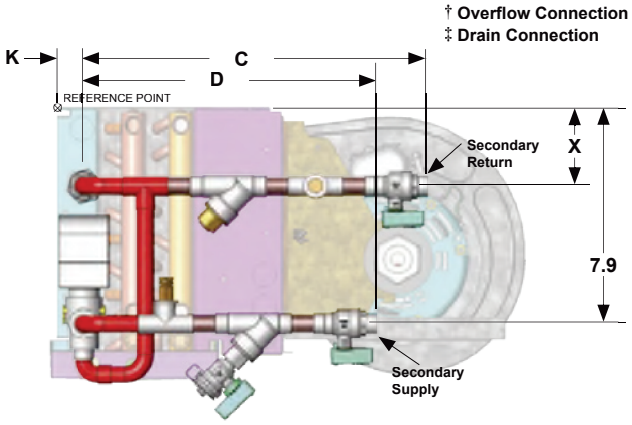

Secondary Piping End View

Name	Component Description	Primary Package Connections from Reference Point (2- & 3-row Coil)		Secondary Package Length		Secondary Coil Connection from Reference Point			
		Supply (A)*	Return (B)*	Return (C)	Supply (D)	Preheat (K)	Reheat (K)	High Capacity (X)	Standard Capacity (X)
Basic 2W	2Way control valve, shut-off valves	12.2	16.2	6.5	7.1	4.53	1.03	0.8	2.8
Basic 3W	3Way control valve, shut-off valves	12.2	17.0	9.0	7.1				
Enhanced 2W	2Way control valve, shut-off valves, strainer	15.8	16.3	6.5	10.7				
Enhanced 3W	3Way control valve, shut-off valves, strainer	15.8	17.0	9.0	10.7				
Premium 2W, auto flow	2Way control valve, shut-off valves, auto flow-setter	12.3	15.8	6.1	7.1				
Premium 2W, manual flow	2Way control valve, shut-off valves, manual flow-setter	12.3	16.6	10.6	7.1				
Premium 3W, auto flow	3Way control valve, shut-off valves, auto flow-setter	12.2	14.8	5.1	7.1				
Premium 3W, manual flow	3Way control valve, shut-off valves, manual flow-setter	12.2	15.6	9.6	7.1				
Deluxe 2W, auto flow	2Way control valve, shut-off valves, strainer, auto flow-setter	15.8	15.8	6.1	10.7				
Deluxe 2W, manual flow	2Way control valve, shut-off valves, strainer, manual flow-setter	15.8	16.6	10.6	10.7				
Deluxe 3W, auto flow	3Way control valve, shut-off valves, strainer, auto flow-setter	12.2	14.8	5.1	10.7				
Deluxe 3W, manual flow	3Way control valve, shut-off valves, strainer, manual flow-setter	12.2	15.6	9.6	10.7				

NOTE: For 4-row Primary Coils add 1" to the dimensions A and B shown

Figure 52: Fan Coil Wiring Diagram – Typical Low Voltage Interface Board and ECM, Intermediate Electric Heat, F/A Damper, 3-Speed Switch–Unit Mounted

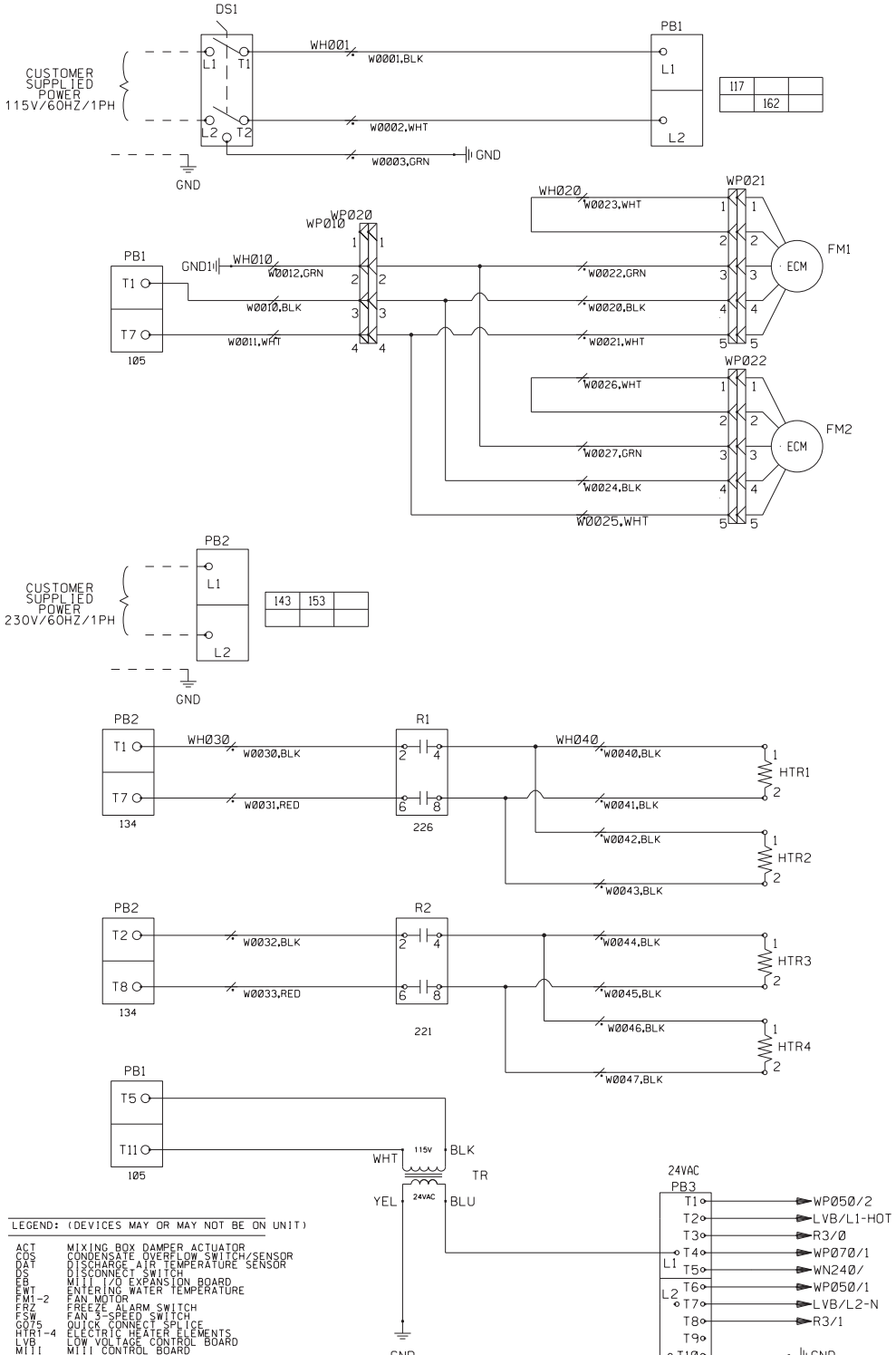

Figure 52 continued: Fan Coil Wiring Diagram – Typical Low Voltage Interface Board and ECM, Intermediate Electric Heat, F/A Damper, 3-Speed Switch–Unit Mounted

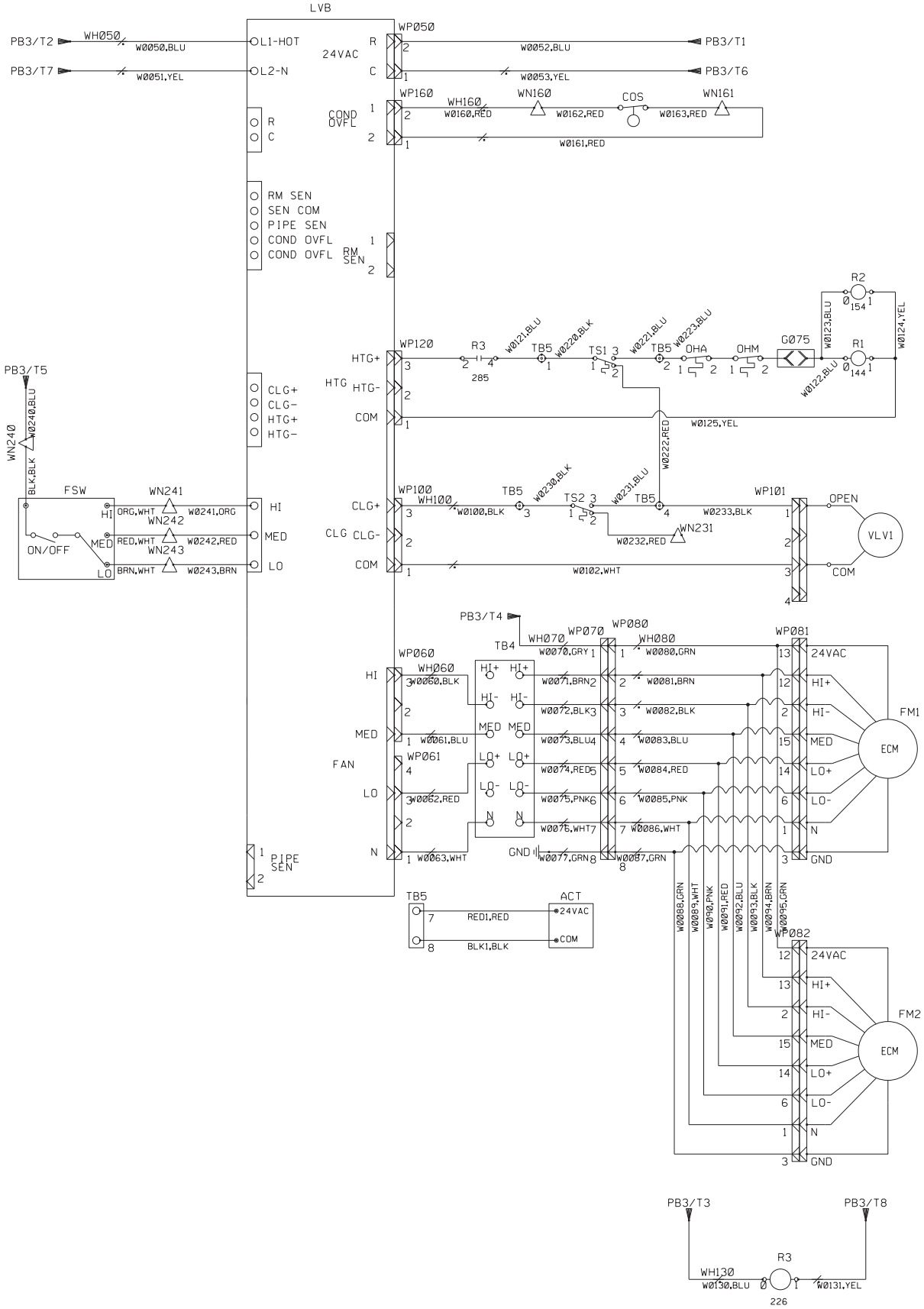

Figure 53: Fan Coil Wiring Diagram – Typical MicroTech Controller with ECM and Economizer, Intermediate Electric Heat

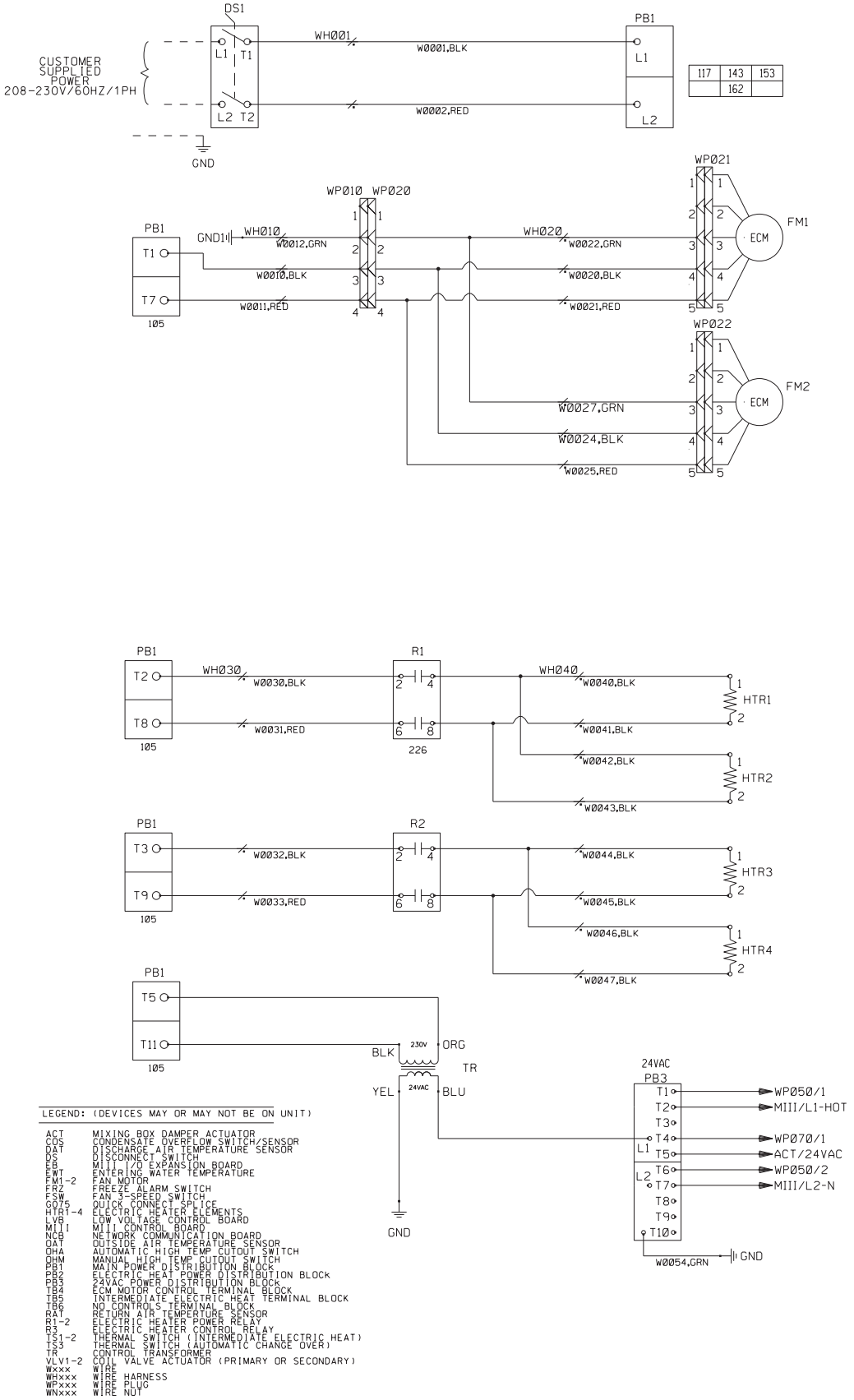

LEGEND: (DEVICES MAY OR MAY NOT BE ON UNIT)

ACT	MIXING BOX DAMPER ACTUATOR
COS	CONDENSATE OVERFLOW SWITCH/SENSOR
DAT	DISCHARGE AIR TEMPERATURE SENSOR
DS	DISCONNECT SWITCH
EB	MIII I/O EXPANSION BOARD
EWT	ENTERING WATER TEMPERATURE
FM1-2	FAN MOTOR
FRZ	FREEZE ALARM SWITCH
FSW	FAN 3-SPEED SWITCH
GQ75	QUICK CONNECT SPLICE
HTR1-4	ELECTRIC HEATER ELEMENTS
LVB	LOW VOLTAGE CONTROL BOARD
MIII	MIII CONTROL BOARD
NCB	NETWORK COMMUNICATION BOARD
OAT	OUTSIDE AIR TEMPERATURE SENSOR
OHA	AUTOMATIC HIGH TEMP CUTOUT SWITCH
OHM	MANUAL HIGH TEMP CUTOUT SWITCH
PB1	MAIN POWER DISTRIBUTION BLOCK
PB2	ELECTRIC HEAT POWER DISTRIBUTION BLOCK
PB3	24VAC POWER DISTRIBUTION BLOCK
TB4	ECM MOTOR CONTROL TERMINAL BLOCK
TB5	INTERMEDIATE ELECTRIC HEAT TERMINAL BLOCK
TB6	NO CONTROLS TERMINAL BLOCK
RAT	RETURN AIR TEMPERATURE SENSOR
R1-2	ELECTRIC HEATER POWER RELAY
R3	ELECTRIC HEATER CONTROL RELAY
TS1-2	THERMAL SWITCH (INTERMEDIATE ELECTRIC HEAT)
TS3	THERMAL SWITCH (AUTOMATIC CHANGE OVER)
TR	CONTROL TRANSFORMER
VLV1-2	COIL VALVE ACTUATOR (PRIMARY OR SECONDARY)
Wxxx	WIRE
WHxxx	WIRE HARNESS
WPxxx	WIRE PLUG
WNxxx	WIRE NUT

Figure 53 continued: Fan Coil Wiring Diagram – Typical MicroTech Controller with ECM and Economizer, Intermediate Electric Heat

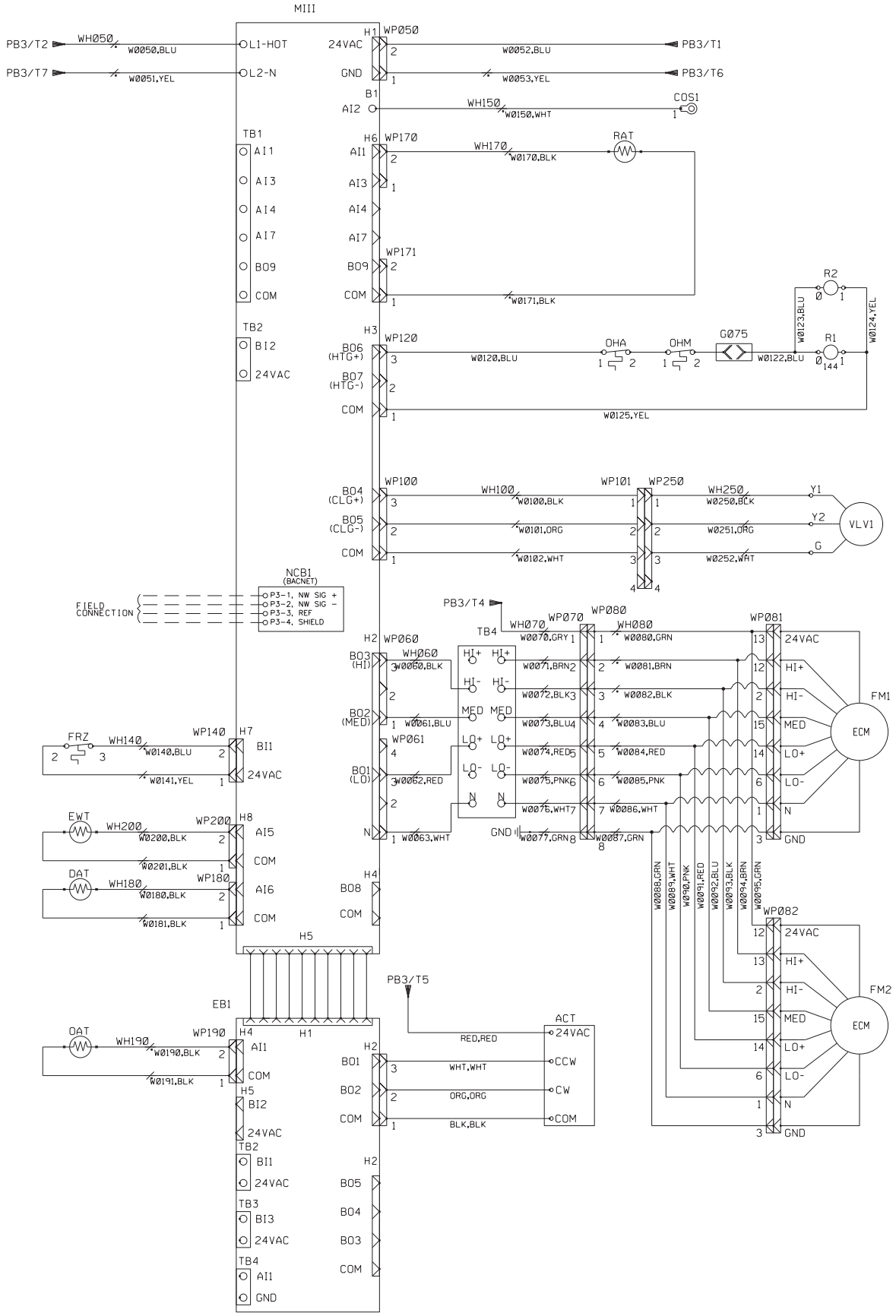

Figure 54: Fan Coil Wiring Diagram – Unit Mounted 3 Speed Switch, Low Voltage Valves

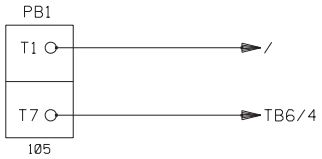

LEGEND: (DEVICES MAY OR MAY NOT BE ON UNIT)

ACT	MIXING BOX DAMPER ACTUATOR
COS	CONDENSATE OVERFLOW SWITCH/SENSOR
DAT	DISCHARGE AIR TEMPERATURE SENSOR
DS	DISCONNECT SWITCH
EB	MIII I/O EXPANSION BOARD
EWT	ENTERING WATER TEMPERATURE
FM1-2	FAN MOTOR
FRZ	FREEZE ALARM SWITCH
FSW	FAN 3-SPEED SWITCH
GC75	QUICK CONNECT SPLICE
HTR1-4	ELECTRIC HEATER ELEMENTS
LVB	LOW VOLTAGE CONTROL BOARD
MIII	MIII CONTROL BOARD
NCB	NETWORK COMMUNICATION BOARD
OAT	OUTSIDE AIR TEMPERATURE SENSOR
OHA	AUTOMATIC HIGH TEMP CUTOUT SWITCH
OHM	MANUAL HIGH TEMP CUTOUT SWITCH
PB1	MAIN POWER DISTRIBUTION BLOCK
PB2	ELECTRIC HEAT POWER DISTRIBUTION BLOCK
PB3	24VAC POWER DISTRIBUTION BLOCK
TB4	ECM MOTOR CONTROL TERMINAL BLOCK
TB5	INTERMEDIATE ELECTRIC HEAT TERMINAL BLOCK
TB6	NO CONTROLS TERMINAL BLOCK
RAT	RETURN AIR TEMPERTURE SENSOR
R1-2	ELECTRIC HEATER POWER RELAY
R3	ELECTRIC HEATER CONTROL RELAY
TS1-2	THERMAL SWITCH (INTERMEDIATE ELECTRIC HEAT)
TS3	THERMAL SWITCH (AUTOMATIC CHANGE OVER)
TR	CONTROL TRANSFORMER
VLV1-2	COIL VALVE ACTUATOR (PRIMARY OR SECONDARY)
Wxxx	WIRE
WHxxx	WIRE HARNESS
WPxxx	WIRE PLUG
WNxxx	WIRE NUT

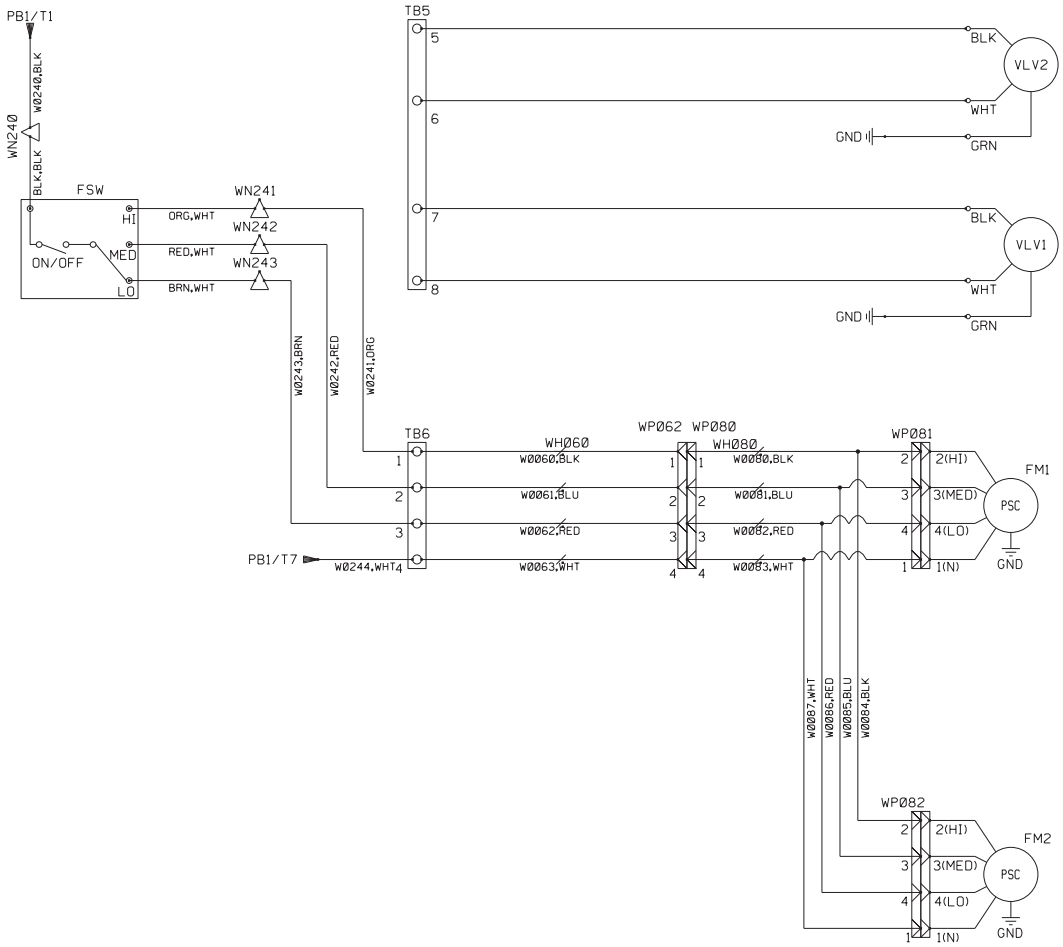

Table 3: Model Number Description: Fields 1—21

Field	1	2	3	4	5	6	7	8	9	10	11	12	13	14	15	16	17	18	19	20	21
Code	FC	HC	1	02	A	A	G	M	Y	YY	W	3	12	R	F	T	YY	12	Y	Y	N

1. Unit Type
   - FC = fan coil
   - FH = cabinet unit heater
2. Product Identifier
   - HC = horizontal, exposed
   - HH = horizontal, concealed
3. Design Series
   - 1 = Design 1
4. Unit Size - nominal capacity
   - 02 = 200 cfm
   - 03 = 300 cfm
   - 04 = 400 cfm
   - 06 = 600 cfm
   - 08 = 800 cfm
   - 10 = 1000 cfm
   - 12 = 1200 cfm
   - 14 = 1400 cfm
5. Volts/Hertz/Phase
   - A = 115/60/1
   - E = 208-230/60/1
   - J = 265-277/60/1
6. Coil fin type
   - A = aluminum
7. Coil casing material
   - G = galvanized
8. Coil air vent
   - M = manual
   - A = auto
9. Coil coating
   - Y = none
10. Not currently used
    - YY = none
11. Primary Coil Type
    - C = chilled water only
    - W = CW/HW 2-pipe
    - H = hot water only
    - S = steam
12. Primary Coil Rows
    - 2 = 2 row
    - 3 = 3 row
    - 4 = 4 row
13. Primary Coil Fins Per Inch
    - 12 = 12 fins per inch
14. Primary Coil Connection Hand
    - L = left hand
    - R = right hand
15. Primary Coil Piping Package
    - F = factor installed
    - L = shipped loose
    - Y = none
16. Primary Coil Connection Type
    - S = sweated
    - T = threaded
    - N = none
17. Preheat Coil Type
    - E1 = electric single stage
    - M1 = intermediate electric single-stage
    - W1 = water standard capacity
    - W2 = water high capacity
    - S1 = standard capacity
    - S2 = high capacity
    - YY = none
18. Preheat Coil Fins Per Inch
    - 12 = 12 fins per inch
19. Preheat Coil Connection Hand
    - L = left hand
    - R = right hand
    - Y = none
20. Preheat Coil Piping Package
    - F = factor installed
    - L = shipped loose
    - Y = none
21. Preheat Coil Connection Type
    - S = sweated
    - T = threaded
    - N = none

Table 3 continued: Model Number Description: Fields 22—41

Field	22	23	24	25	26	27	28	29	30	31	32	33	34	35	36	37	38	39	40	41
Code	YY	W1	12	R	F	T	Y	000	Y	P	PSC	S	3	Q	Y	MR	Y	D	Y	R

22. Not currently used
    - YY = none
23. Reheat Coil Type
    - W1 = water standard capacity
    - W2 = water high capacity
    - S1 = standard capacity
    - S2 = high capacity
    - YY = none
24. Reheat Coil Fins Per Inch
    - 12 = 12 fins per inch
25. Reheat Coil Connection Hand
    - L = left hand
    - R = right hand
    - Y = none
26. Reheat Coil Piping Package
    - F = factor installed
    - L = shipped loose
    - Y = none
27. Reheat Coil Connection Type
    - S = sweated
    - T = threaded
    - N = none
28. Electric Heat Power Supply
    - A = 115-60-1
    - E = 208-230/60/1
    - J = 277-265/60/1
    - Y = None
29. Electric Heat Wattage
    - 005 = 0.5 kW electric heat
    - 010 = 1.0 kW electric heat
    - 015 = 1.5 kW electric heat
    - 020 = 2.0 kW electric heat
    - 025 = 2.5 kW electric heat
    - 030 = 3.0 kW electric heat
    - 040 = 4.0 kW electric heat
    - 050 = 5.0 kW electric heat
    - 060 = 6.0 kW electric heat
    - 080 = 8.0 kW electric heat
    - 100 = 10.0 kW electric heat
    - 000 = None
30. Not currently used
    - YY = none
31. Drain Pan Material
    - G = galvanized
    - S = stainless steel
32. Blower Motor Type
    - PSC = PSC motor
    - ECM = ECM motor
    - XXX = special
33. Discharge Conditions
    - S = standard static
    - H = high static
34. Motor Speed
    - 3 = 3 speed
35. Motor Connections
    - Q = quick connect
36. Not currently used
    - YY = none
37. Fresh Air Damper
    - MR = manual rear
    - 2R = automatic, 2-position, rear
    - ER = automatic, economizer
    - XX = special
    - YY = none
38. Not currently used
    - YYY = none
39. Unit Disconnect Switch
    - D = toggle disconnect switch
    - X = special
    - Y = none
40. Site Control Voltage
    - L = 24V (low) voltage
    - H = line voltage
41. Control Type
    - A = analog
    - D = digital
    - M = MicroTech III
    - R = low voltage interface board
    - S = 3-speed switch
    - X = Special
    - Y = None

Table 3 continued: Model Number Description: Fields 42—56

Field	42	43	44	45	46	47	48	49	50	51	52	53	54	55	56
Code	Y	Y	Y	RL	MOR	Y	3MOU	YYYY	3MOU	Y	Y	C	Y	Y	Y

42. Network Communication Card
    - Y = none
43. Changeover Type
    - Y = none
    - A = auto
    - M = manual
    - U = user selectable
44. Programmability
    - Y = none
45. Setpoint Adjustment
    - YY = none
    - UL = unit-mounted, +/- 3 degrees
    - UF = unit-mounted, full range
    - RL = remote-mounted, +/- 3 degrees
    - RF = remote-mounted, full range
46. Fan Speed Control
    - YYY = None
    - MBU = manual, off/low/med/high, unit-mounted
    - MBR = manual, off/low/med/high, remote-mounted
47. Timed Override
    - Y = none
48. Valve - Primary Coil
    - See Table 4
49. Valve - Preheat Coil
    - See Table 4
50. Valve - Reheat Coil
    - See Table 4
51. Future Control Function
    - Y = None
52. Low Temperature Protection
    - A = auto
    - Y = None
    - X = special
53. Condensate Overflow Protection
    - C = condensate overflow protection
    - Y = None
    - X = special
54. Discharge Air Thermistor
    - Y = None
    - X = special
55. Smoke Input Sensor
    - Y =none
    - X = special
56. Occ / Vacant Control Input
    - Y = none
    - X = special

Table 3 continued: Model Number Description: Fields 57—72

Field	57	58	59	60	61	62	63	64	65	66	67	68	69	70	71	72
Code	Y	Y	Y	Y	S	18	P	I	00	S	00	00	30F	TA	FR	1

57. Filter Status Sensor
    - Y = none
    - X = special
58. Fan Status Sensor
    - Y = none
    - X = special
59. Future Control Function
    - Y = none
60. Future Control Function
    - Y = none
61. Cabinet Style
    - S = standard
    - T = tamperproof
    - Y = none
62. Cabinet Gauge
    - 16 = 16 gauge
    - 18 = 18 gauge
    - YY = none
    - XX = special
63. Cabinet Coating Type
    - B = powder coat
    - Y = none
64. Color- Cabinet
    - I = antiqueivory
    - W = off white
    - G = soft gray
    - C = cupola white
    - P = putty beige
    - Y = none
    - X = special
65. Cabinet Depth Extension
    - 00 = none
66. Unit Lineup Position
    - S = standalone
67. Left Hand End Pocket Extension
    - 00 = none
    - 04 = 4 inch extended length
68. Right Hand End Pocket Extension
    - 00 = none
    - 04 = 4 inch extended length
69. Subbase (not applicable)
70. Discharge Air - Outlet
    - BA = bottom discharge with double deflection grille
    - BD = bottom discharge with duct collar
    - BP = open bottom discharge
    - BS = bottom discharge with stamped louver grille
    - FA = front discharge with double deflection grille
    - FD = front discharge with duct collar
    - FP = open front discharge
    - FS = front discharge with stamped louver grille
    - XX = special
71. Return Air Inlet
    - BS = bottom inlet with stamped louver
    - BD = bottom inlet with duct collar (plenum)
    - RD = rear inlet with duct collar (plenum)
    - RS = rear inlet with stamped louver
    - XX = special
    - YY = no plenum (open return)
72. Filter
    - 1 = 1 inch Throwaway Filter
    - 3 = 1 inch Throwaway + (1) Extra

Table 3 continued: Model Number Description: Fields 73—78

Field	73	74	75	76	77	78
Code	YYY	Y	A	S	Y	1

73. Special Options
    - YYY = none
74. Reserved for future use
    - Y = none
75. Agency Listing
    - A = ETL, CETL, ARI
    - R = ETL, CSA
    - X = special
    - Y = none
76. Packaging
    - S = Standard
    - T = palletized based on tagging and by floor
77. Extended Warranty
    - Y = none (standard warranty)
    - 1 = 1 year Extended component warranty (30 month from shipment or 24 month from installation)
    - 2 = 2 year Extended component warranty (42 month from shipment or 36 month from installation)
    - 3 = 3 year Extended component warranty (54 month from shipment or 48 month from installation)
    - 4 = 4 year Extended component warranty (66 month from shipment or 60 month from installation)
    - X = special
78. Product Style
    - 1 = Style 1

Figure 55: Model Number Detail — Valve Package Fields 48—50

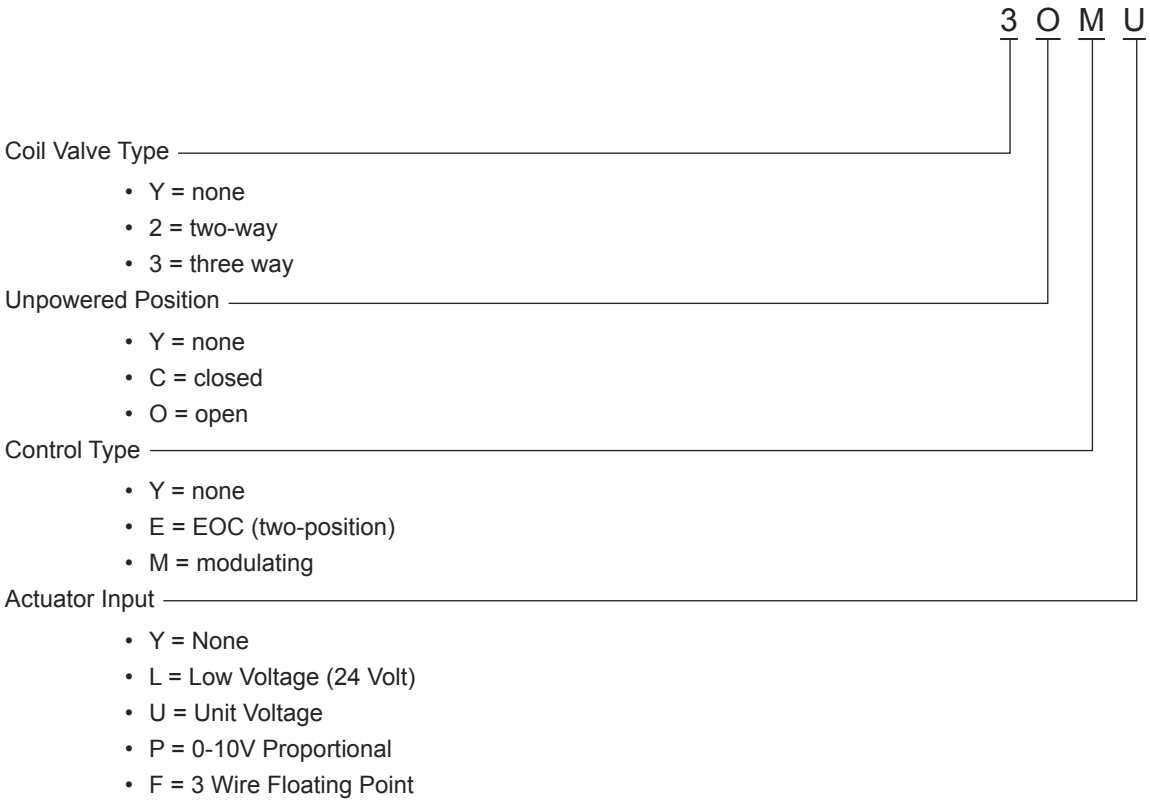

Addendum Material

Installation and Maintenance Manual IM 1014

Group: **Applied Air Systems**
Part Number: **910102989**
Date: **October 2013**

MT 155 Thermostat

Installation

⚠ DANGER

READ THESE INSTRUCTIONS CAREFULLY BEFORE ATTEMPTING TO INSTALL, OPERATE OR SERVICE THIS THERMOSTAT.

Failure to observe safety information and comply with instructions could result in PERSONAL INJURY, DEATH AND/ OR PROPERTY DAMAGE.

To avoid electrical shock or damage to equipment, disconnect power before installing or servicing. Use only wiring with insulation rated for full thermostat operating voltage. Use copper wire only. Insulate or wirenut all un-used leads. Any wiring, including the remote probe,may carry the full operating voltage of the thermostat.

To avoid potential fire and/ or explosion do not use in potentially flammable or explosive atmospheres. Retain these instructions for future reference. You must review your application and national and local codes to ensure that your installation will be functional and safe.

Figure 1: Removing Jumper JP-1

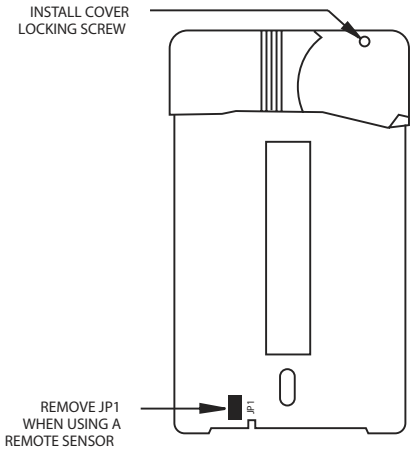

1. Install the thermostat with the two furnished mounting screws to a standard 2" × 4" electrical box, 4-11/16" × 21/8" square device box with a 2" x 4" adapter ring or to a 4" × 4" box with accessory adapter plate.
2. For wall installations, mount the thermostat on an inside wall approximately 5 feet above the floor. The location should provide circulation at average room temperature. Avoid direct sunlight or sources of hot or cold air in the room or wall.
3. Remove the knob and then the cover. Mount thermostat base assembly to the outlet box using the screws provided, tighten the screws evenly but do not over tighten. Make wiring connections as noted.
4. To use a remote sensor, remove jumper JP-1 to disable local sensing. See Figure 1. Failure to remove JP-1 when using a remote sensor will cause improper operation of the thermostat. Some units do not have remote sensing capability. See Application Notes.
5. Reinstall the cover assembly. Install cover locking screw provided. Reinstall the knob.
6. Checkout: After wiring and installation are complete, energize the system and check the operation. Adjust the thermostat as necessary to complete at least one cycle. Be sure the thermostat and all other equipment are functioning correctly.

DAIKIN

Thermostat Operation

Temperature Range: 50°F - 90°F (10°C - 32°C)

TA155: A HEAT-OFF-COOL system switch manually selects heating or cooling mode. In the HEAT position, only the heat output cycles with demand. In the COOL position, only the cool output cycles with demand. In the OFF position, heating and cooling outputs are off. Units with a two position system switch or without a system switch must use a load transfer switch when both heating and cooling outputs are used. This prevents control failure and equipment damage caused by direct cycling between loads.

TB155: An ON-OFF system switch enables auto-changeover of heating and cooling modes. In the ON position the thermostat activates heating or cooling outputs dependant upon the relationship between set point and ambient temperature. Heat on to cool on dead band is 4°F. In the OFF position, heating and cooling outputs are off. Units without a system switch cycle between heating and cooling with a 4°F dead band.

FAN: Some units have a switch for manual selection of fan speed. On these units fan operation is either internally wired for fan continuous operation or is dependant upon connection to the fan supply input . When internally wired for fan continuous operation, the fan will be off when the system switch is off. When dependant upon external connections the fan may not be off with the system switch in the off position. The fan supply input is switched to fan speed outputs (HI - MED - LO).

SWITCHED POWER: L1 power is switched to this output any time the system switch is out of the OFF position.

Ratings

Table 1: Fan and system switches

Voltage Rating	Inductive		Resistive Amps	Pilot Duty	Thermostatic Switching
	FLA	LRA			
24 VAC	N.A.	N.A.	N.A.	24 VA	10 VA
120	5.8	34.8	6.0	125 VA	20 VA
240	2.9	17.4	5.0	125 VA	20 VA
277	2.4	14.4	4.2	125 VA	20 VA

Table 2: Wire Lead Colors (if applicable)

Wire Color	Purpose
White with Orange Stripe	Fan High
White with Red Stripe	Fan Med.
White with Brown Stripe	Fan Low
Red	Heat
Blue	Cool
Black	L1
Yellow	L2 or Neutral
Orange	Switched Power
Violet	Fan Supply
Brown	Remote Probe
Brown	Remote Probe

Application Notes

1. To use a remote sensor, remove jumper JP-1 to disable local sensing. See Figure 1. Failure to remove JP-1 when using a remote sensor will cause improper operation of the thermostat. Some units do not have remote sensing capability.
2. Units with remote sensing capability have a four-position terminal block at TB1. If TB1 is two position the unit is local sensing only.
3. Remote probe wiring should be located away from any electrical motors or power wiring
4. Some units are internally wired for permanent fan continuous operation.
5. On units with a Fan Supply input, the operation of the fan is determined by wiring connection. For fan continuous, jumper the Fan Supply input (TB2-5) to the Switched Power output (TB3-3).
6. For fan cycling operation with a call for heat or cool, a fan relay must be used.
7. Observe electrical ratings. Thermostatic outputs are pilot duty only.

DAIKIN

Wiring Diagrams

Figure 2: Units with remote sensing capability

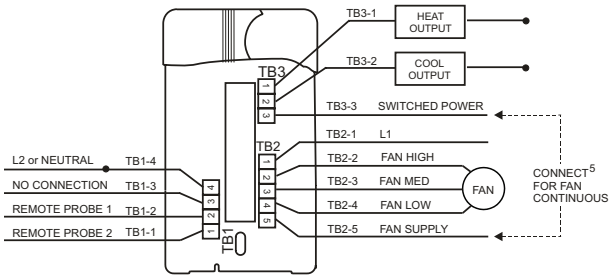

Figure 3: Units with switches used for local sensing only

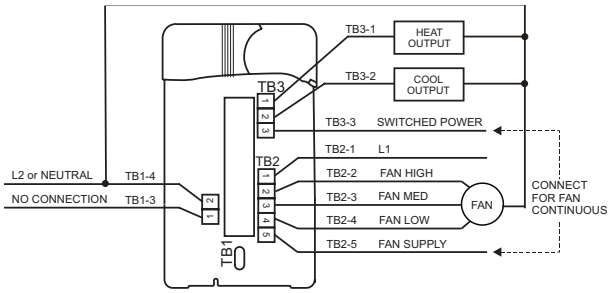

Figure 4: Units with no switches with local/remote sensing capability

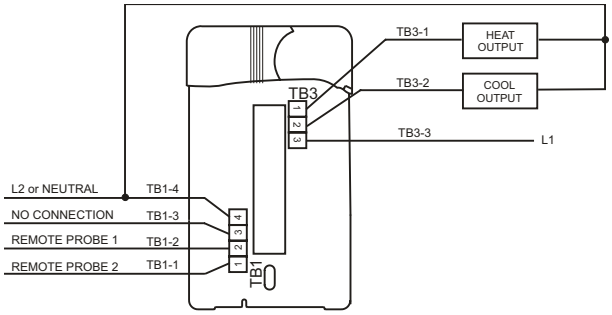

Figure 5: Units with no switches used for local sensing only

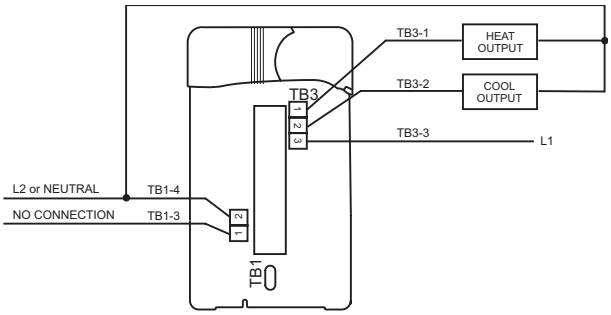

©2013 Daikin Applied | (800) 432–1342 | www.DaikinApplied.com

Addendum Material

DAIKIN

Installation and Maintenance Manual IM 1089

Group: **Applied Air Systems**
Part Number: **IM 1089**
Date: **October 2013**

MT 155 A/B Thermostat Field Installation

24V Valve Packages on ThinLine™ Vertical Fan Coil Units with Factory-Installed Low Voltage Interface Board

General

⚠ DANGER

READ THESE INSTRUCTIONS CAREFULLY BEFORE ATTEMPTING TO INSTALL, OPERATE OR SERVICE THIS THERMOSTAT.

Failure to observe safety information and comply with instructions could result in PERSONAL INJURY, DEATH AND/ OR PROPERTY DAMAGE.

To avoid electrical shock or damage to equipment, disconnect power before installing or servicing. Use only wiring with insulation rated for full thermostat operating voltage. Use copper wire only. Insulate or wire-nut all un-used leads. Any wiring, including the remote probe, may carry the full operating voltage of the thermostat. To avoid potential fire and/ or explosion do not use in potentially flammable or explosive atmospheres. Retain these instructions for future reference. You must review your application and national and local codes to ensure that your installation will be functional and safe.

⚠ CAUTION

Care should be used to avoid electrostatic discharge to the microprocessor.

This unit has configuration dip switches and jumpers. You may need to reconfigure the thermostat for your application.

Installation

Two-pipe system (Cooling or Heating)

To field wire a T*155 thermostat (either as wall-mounted or unit-mounted) and field-install valve package for a 2-pipe system the following accessories are required:

- Single-Pole Double-Throw Automatic Changeover Switch (SPDT ACO Kit P/N 039398600)
- Thermostat TA155 (kit) – PN 107345302 or Thermostat TB155 (kit) – PN 107345304
- 10K Return Air Sensor - PN 107345501

Step 1: Installing NC (Normally Closed) valve packages

- Solder the appropriate inlet and outlet pipe connections from the valve package to the coil connections. Refer to Figures 1, 2, 3 and 4.
- Snap-on the SPDT ACO Switch on the supply side of the valve package (SPDT ACO Kit P/N 039398600 to be ordered as field-installed option)
- Cut white wire 60 of the wiring harness leading from the Low Voltage Interface Board terminal connection (see Fig. 1) prior to attaching the quick-connect connector of the On-Off valve actuator to the interface board (Fig. 3). The white wire lead going to the actuator will be connected to terminal No. 1 of the ACO switch (see Fig. 5):
  - Terminal No. 1: black wire - to be connected to the valve side (G terminal) with white wire of the terminal strip
  - Terminal No. 2: red wire – to be connected to the red wire (TB3-1) of the thermostat
  - Terminal No. 3: blue wire – to be connected to the blue wire (TB3-2) of the thermostat

DAIKIN

Figure 1: Automatic changeover connection between the valve actuator and the interface board

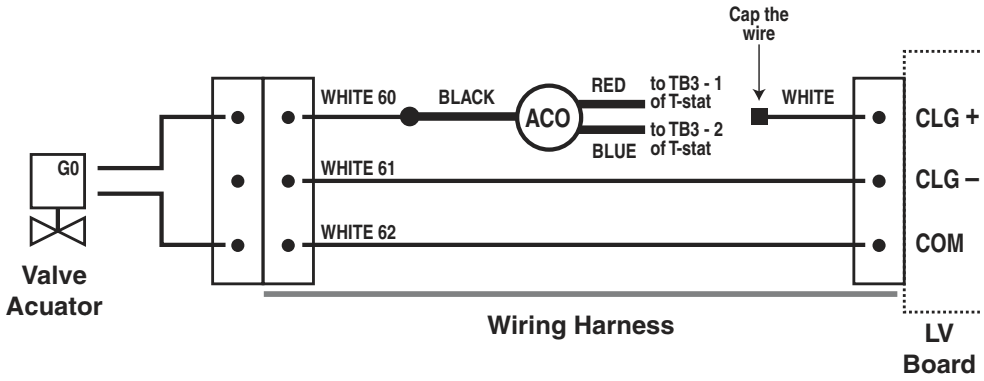

Step 2: Provide power to thermostat

- Connect a wire from thermostat terminal TB1- 4 (L2 Neutral) to the common terminal on Low Voltage Interface Board (terminal C) Refer to Figures 2 and 4.
- Connect a wire from thermostat terminal TB2- 1 (24VAC) to the 24 V terminal connection R.
- Connect fan speed wires from the thermostat to appropriate Low Voltage Interface Board terminals:
- Connect a wire from thermostat terminal TB2- 2 (High fan speed) to the HI terminal
- Connect a wire from thermostat terminal TB2- 3 (Med fan speed) to the Med terminal
- Connect a wire from thermostat terminal TB2- 24 (Low fan speed) to the Low terminal
- Remove Jumper JP1 to allow the remote mounted 10K Return Air Sensor to operate.
- Mount the 10K Return Air Sensor (PN 107345501) above the filter through the knockout provided Note: (1) If a fan coil unit is to be used for heating or cooling only, the SPDT ACO Switch (SPDT ACO Kit P/N 039398600) is not required. For such applications just follow Step 2.

Figure 2: Low Voltage Interface Board shown with all additional support options

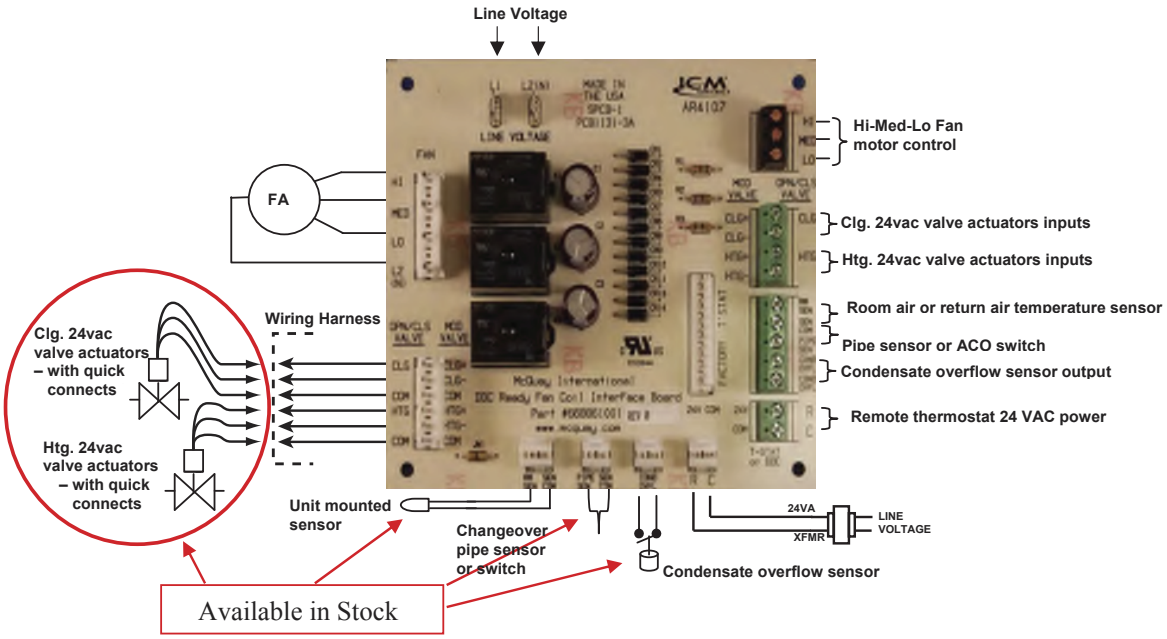

Figure 3: Factory-installed and wired Low Voltage Interface Board (Wiring Diagram)

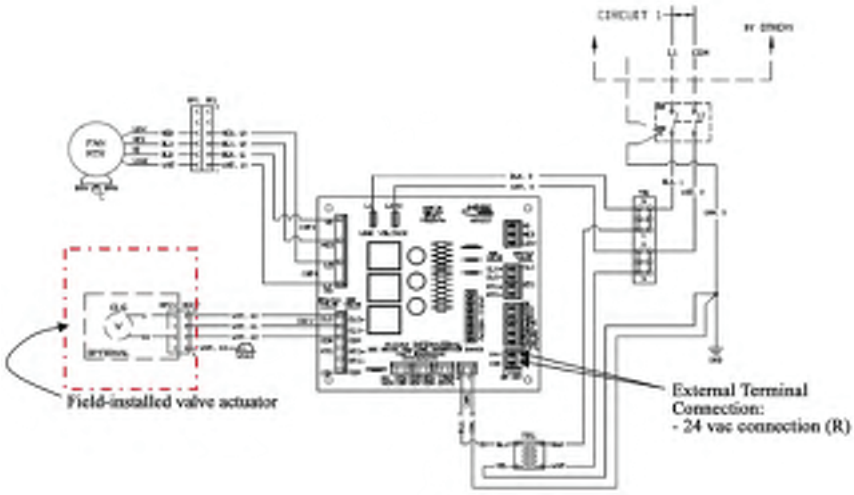

Figure 4: Thermostat TB155 autochangeover to be used with ON-OFF 24V valve packages, SPDT ACO and unit-mounted Low Voltage Interface Board

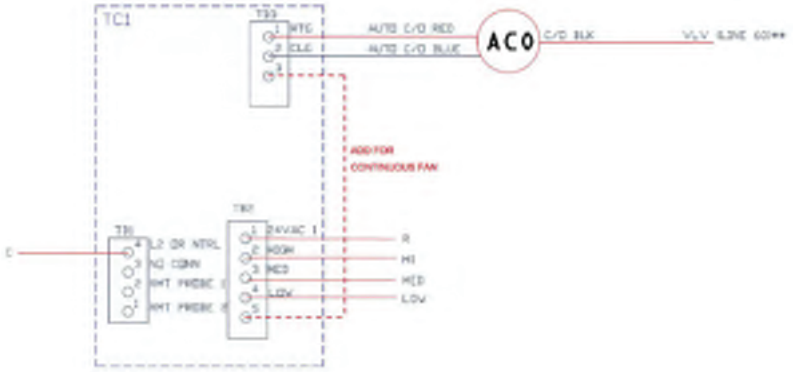

Figure 5: Automatic changeover switch (SPDT ACO Kit P/N 039398600)

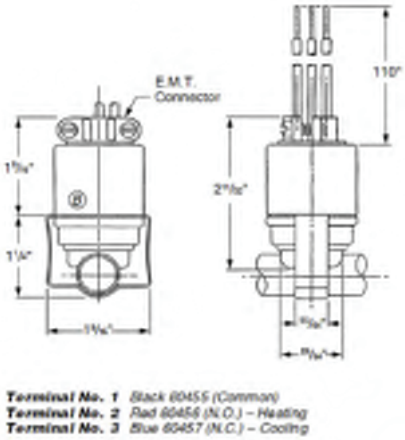

Four-pipe system (Cooling and Heating)

Two piping packages will be required for CW and HW coils. The following accessories needed for field-installed thermostat model T*155 (unit-mounted or wall-mounted):

- Thermostat TA155 (kit) – PN 107345302 or Thermostat TB155 (kit) – PN 107345304
- 10K Return Air Sensor - PN 107345501 for unit-mounted applications only (for wall-mounted applications the sensor is imbedded with the thermostat)

Step 1: Installing valve packages

- Solder the appropriate inlet and outlet CW pipe connections from the valve package to the coil connections.
- Solder the appropriate inlet and outlet HW pipe connections from the valve package to the coil connections.
- Snap-on the Quick-connects of the valve actuators to the appropriate terminals of the Low Voltage Interface Board as per Fig. 2.

Step 2: Provide power to thermostat

- Connect a wire from thermostat terminal TB1- 4 (L2 Neutral)to the common terminal on the interface board (terminal C) Refer to Figure 2 and 4.
- Connect a wire from thermostat terminal TB2- 1 (24VAC) tothe 24 V terminal connection R.
- Connect fan speed wires from the thermostat to the appropriate Low Voltage Interface Board terminals:
- Connect a wire from thermostat terminal TB2- 2 (High fan speed) to the HI terminal
- Connect a wire from thermostat terminal TB2- 3 (Med fan speed) to the Med terminal
- Connect a wire from thermostat terminal TB2- 24 (Low fan speed) to the Low terminal
- Remove Jumper JP1 to allow the remote mounted the 10K Return Air Sensor to operate.
- Mount the 10K Return Air Sensor (PN 107345501) above the filter through the knockout provided

NOTE: (2) For thermostats supplied by others refer to the manufacturer's installation literature and use this manual as a guideline only.

©2013 Daikin Applied | (800) 432–1342 | www.DaikinApplied.com

Installation and Maintenance Manual IM 1015

Group: **Applied Air Systems**
Part Number: **910102990**
Date: **October 2013**

MTA 158 Microprocessor Thermostat

ON/OFF Controller

Installation

⚠ DANGER

READ THESE INSTRUCTIONS CAREFULLY BEFORE ATTEMPTING TO INSTALL, OPERATE OR SERVICE THIS THERMOSTAT.

Failure to observe safety information and comply with instructions could result in PERSONAL INJURY, DEATH AND/ OR PROPERTY DAMAGE.

To avoid electrical shock or damage to equipment, disconnect power before installing or servicing. Use only wiring with insulation rated for full thermostat operating voltage. Use copper wire only. Insulate or wirenut all unused leads. Any wiring, including the remote probe,may carry the full operating voltage of the thermostat.

To avoid potential fire and/ or explosion do not use in potentially flammable or explosive atmospheres.

Retain these instructions for future reference. You must review your application and national and local codes to ensure that your installation will be functional and safe.

⚠ CAUTION

Care should be used to avoid electrostatic discharge to the microprocessor.

This unit has configuration jumpers. You may need to reconfigure this thermostat for your application.

1. Install the thermostat with the two furnished mounting screws to a standard 4-11/16" × 2-1/8" square device box with a 2" × 4” adapter ring.
2. For wall installations, mount the thermostat on an inside wall approximately 5 feet above the floor. The location should provide circulation at average room temperature. Avoid direct sunlight or sources of hot or cold air in the room or wall.
3. Remove the cover. Mount thermostat base assembly to the outlet box using the screws provided, tighten the screws evenly but do not over tighten. Connect wires as shown in the appropriate wiring diagram for your thermostat style.
4. To use a remote sensor on units with local sensing capability, remove jumper JP-1 to disable local sensing. Failure to remove JP-1 will cause improper operation of the thermostat.

Figure 1: Wiring Diagram for ON/OFF Output Configuration

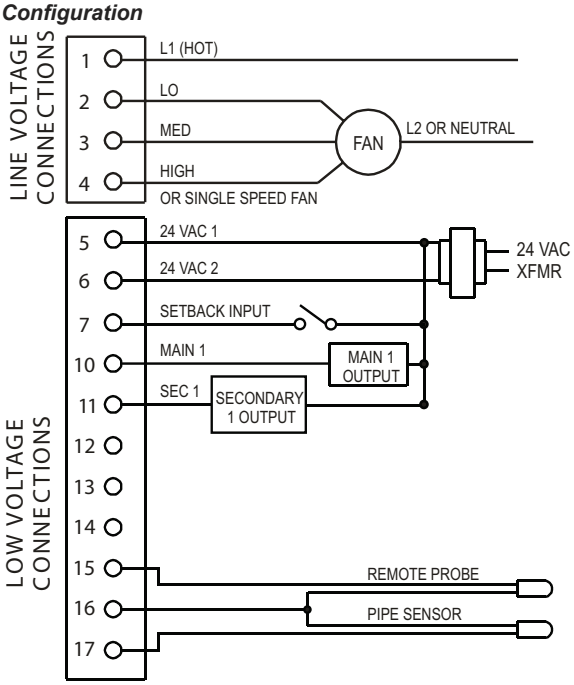

*Table 1: MTA 158 Operation**

Output	OFF with Demand	ON with Demand
Main 1 (Terminal 10)	ON at temperature demand	ON at temperature demand
Main 2 (Terminal 12)	NA	NA
Secondary (Terminal 11)	Summer: OFF with heat demand Winter: Disabled	Summer: ON with heat demand Summer: Disabled
Secondary 2 (Terminal 13)	NA	NA

Note: * Operation determined by configuration. See Dip Switch Configuration Table.

5. Remove the LCD plastic protective film. Reinstall the cover assembly. Install the cover locking screw provided in the hole at the left side of the control enclosure to complete the installation.
6. Checkout: After wiring and installation are complete, energize the system and check the operation. Adjust the thermostat as necessary to complete at least one cycle. Be sure the thermostat and all other equipment are functioning correctly.

Thermostat Operation

These thermostats are designed to control ON-OFF, N.O. and N.C. valves, relays and Erie® three wire floating valves. These units may include a fan switch with one or more fan speed selections.

Mode Button Operation

OFF: All thermostat outputs are off, fan is still operational if connected to manual fan speed switch.

AUTO: The thermostat automatically selects heating or cooling mode depending on the set point and room temperature. The appropriate HEAT or COOL indicator is enabled in addition to AUTO. A 3°F dead-band is provided to prevent short cycling between heating and cooling modes. After change-over the control points automatically shift so that the heating off-point or the cooling off-point equals the setpoint temperature.

COOL: The thermostat operates as a cooling-only thermostat. by pressing the UP and DOWN arrows simultaneously. The heating outputs are disabled.

HEAT: The thermostat operates as a heating-only thermostat. The cooling outputs are disabled.

If constructed without a mode button, the thermostat operates in Auto mode, subject to configuration of the 2/4 pipe jumper and pipe sensor input.

Fan Speed Switch Operation

Fan speed is determined by manual selection from fan switch OFF to HIGH, MEDIUM and/ or LOW. In units with the Cycling Fan Option (demand output), the Fan operation (CYCLING vs. CONTINUOUS) is determined by application connections. In OFF position all outputs are off and display blank.

Up/ Down Arrow Operation

A first touch of either arrow will display the set point (a single set point is employed for both heating and cooling). Continued pressure on either arrow will scroll the set point to new values. After three seconds with no pressure on either arrow, the selected set point becomes effective and the display of the room temperature resumes.

Setback Operation

Connection of the Setback Input to 24 VAC 1 will force the control into unoccupied mode (see wiring diagram). Pressing an arrow key or the mode button on the thermostat cover will disable the setback input for one hour.

Pipe Sensor Operation

If cold water is detected, the system will operate in summer mode and the Main output will be cooling. If hot water is detected, the system will operate in winter mode, the Main output will be heating and First Stage Secondary Output will be disabled. In the case of an ambiguous reading, neither hot nor cold, the thermostat will initiate a purge cycle.

Ratings

Table 2: Fan and system switches

Voltage Rating	Inductive		Resistive Amps	Pilot Duty	Thermostatic Switching
	FLA	LRA			
24 VAC	N.A.	N.A.	N.A.	24 VA	10 VA
120 VAC	5.8	34.8	6.0	125 VA	NA
240 VAC	2.9	17.4	5.0	125 VA	NA
277 VAC	2.4	14.4	4.2	125 VA	NA

DAIKIN

Service Menu

Access: Press UP▲ and DOWN▼ arrows for 5 seconds.

Menu Selection: Select 1 to 5 by pressing the mode button or by pressing the UP▲ and DOWN▼ arrows simultaneously.

Adjust Value: Use UP▲ or DOWN▼ arrow.

Item #	Function	Range	Default
1	Zone Temp Offset	-5.1°F to 5.1°F	0°F
2	Valve Stroke Time	30 sec. to 5 min.	120 sec.
3	Fan Delay to OFF	0 to 10 minutes	0 sec.
4	Compressor Minimum OFF Time	30 sec. to 10 min.	120 sec.
5	Purge Cycle	0 = Time Based 1 = Temperature Based	1

Figure 2: Dipswitch Configuration

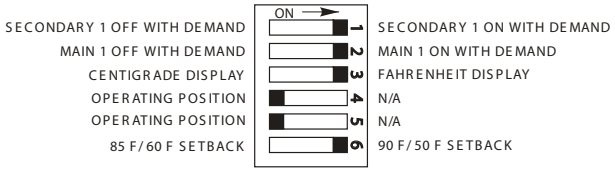

Example: This dip switch is configured for on with demand, °F Display, ON-OFF Operation And 90/50°F Setback.

NOTE: Thermostat power must be cycled for changes in dip switch configuration to take effect.

Figure 3: Circuit Board Jumpers

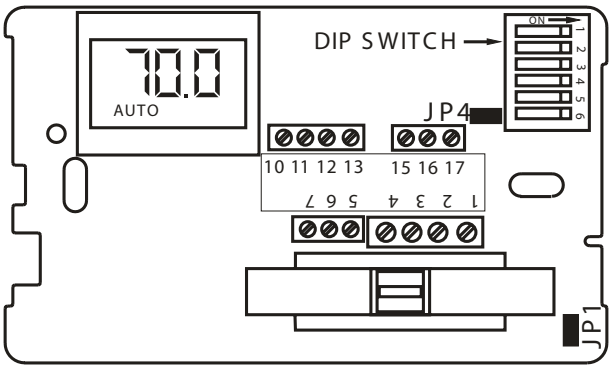

Table 3: Circuit Board Jumper Configuration

Jumper Designation	Jumper Installed ON	Jumper Removed
JP1	Local Sensing	Remote Sensing
JP4	2 Pipe System*	4 Pipe System

Application Notes

1. When no pipe sensor is used the main output controls cooling and the secondary output controls heating.
2. The pipe sensor should be mounted on the main coil input for water system operation and in the main duct system for forced air operation.
3. The set point and operating mode will be retained on a loss of power.
4. When using either a remote probe or pipe sensor, run wiring away from any electrical motors or power wiring.

Power-Up Operating Sequence

Upon application of power, an MTA158 will go directly to normal operation.

©2013 Daikin Applied | (800) 432–1342 | www.DaikinApplied.com

Addendum Material

DAIKIN

Installation and Maintenance Manual IM 1016-1

Group: **Applied Air Systems**

Part Number: **910102991**

Date: **October 2013**

MTB 158 Microprocessor Thermostat

ON/OFF and 3-Wire Controller

⚠ DANGER

READ THESE INSTRUCTIONS CAREFULLY BEFORE ATTEMPTING TO INSTALL, OPERATE OR SERVICE THIS THERMOSTAT.

Failure to observe safety information and comply with instructions could result in PERSONAL INJURY, DEATH AND/ OR PROPERTY DAMAGE.

To avoid electrical shock or damage to equipment, disconnect power before installing or servicing. Use only wiring with insulation rated for full thermostat operating voltage. Use copper wire only. Insulate or wirenut all un-used leads. Any wiring, including the remote probe,may carry the full operating voltage of the thermostat.

To avoid potential fire and/ or explosion do not use in potentially flammable or explosive atmospheres.

Retain these instructions for future reference. You must review your application and national and local codes to ensure that your installation will be functional and safe.

⚠ CAUTION

Care should be used to avoid electrostatic discharge to the microprocessor.

This unit has configuration jumpers. You may need to reconfigure this thermostat for your application.

Installation

1. Install the thermostat with the two furnished mounting screws to a standard 4-11/16" × 2-1/8" square device box with a 2" × 4" adapter ring.
2. For wall installations, mount the thermostat on an inside wall approximately 5 feet above the floor. The location should provide circulation at average room temperature. Avoid direct sunlight or sources of hot or cold air in the room or wall.
3. Remove the cover. Mount thermostat base assembly to the outlet box using the screws provided, tighten the screws evenly but do not over tighten. Connect wires as shown in the appropriate wiring diagram for your thermostat style.
4. To use a remote sensor on units with local sensing capability, remove jumper JP-1 to disable local sensing. Failure to remove JP-1 will cause improper operation of the thermostat.
5. Remove the LCD plastic protective film. Reinstall the cover assembly. Install the cover locking screw provided in the hole at the left side of the control enclosure to complete the installation.
6. Checkout: After wiring and installation are complete, energize the system and check the operation. Adjust the thermostat as necessary to complete at least one cycle. Be sure the thermostat and all other equipment are functioning correctly.

DAIKIN

Figure 1: Wiring Diagram for 3-Wire Valve Configuration

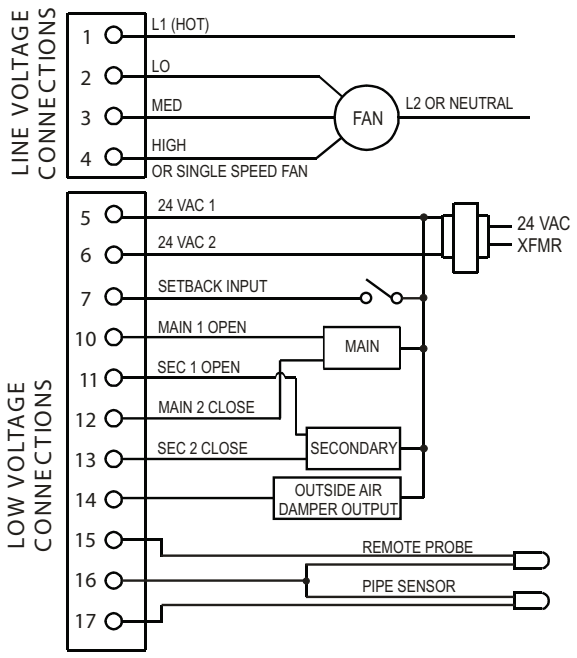

Figure 2: Wiring Diagram for ON/OFF Ouput Configuration

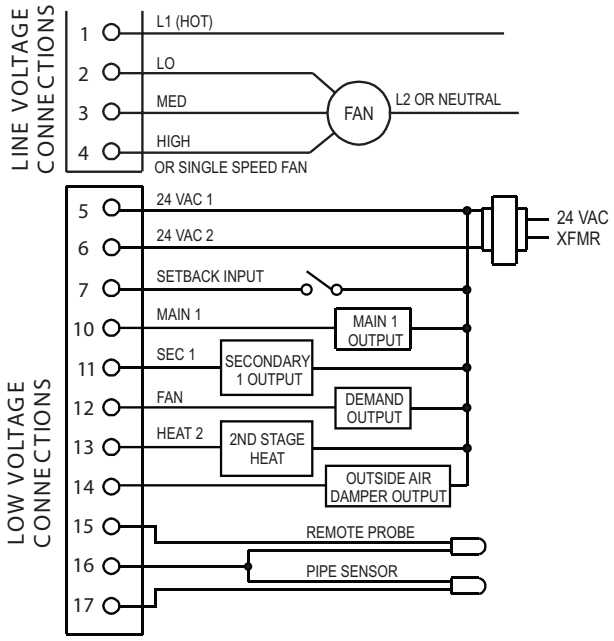

Table 1: Ratings

Voltage Rating	Fan and system switches				Thermostatic Switching (Pilot Duty)
	Inductive		Resistive Amps	Pilot Duty	
	FLA	LRA			
24 VAC	N.A.	N.A.	N.A.	24 VA	10 VA
120 VAC	5.8	34.8	6.0	125 VA	NA
240 VAC	2.9	17.4	5.0	125 VA	NA
277 VAC	2.4	14.4	4.2	125 VA	NA

Thermostat Operation

These thermostats are designed to control ON-OFF, N.O. and N.C. valves, relays and three-wire floating valves. These units may include a fan switch with one or more fan speed selections.

*Table 2: Main and Secondary Output Operation**

Output	3-Wire Floating	OFF with Demand	ON with Demand
Main 1 (Terminal 10)	Powers main valve open	ON at temp demand	ON at temp demand
Main 2 (Terminal 12)	Powers main valve closed	Cycles ON with demand	Cycles ON with demand
Secondary (Terminal 11)	Powers secondary valve open	Summer: OFF with heat demand Winter: Disabled	Summer: ON with heat demand Winter: Disabled
Secondary 2 (Terminal 13)	Powers secondary valve closed	ON at second stage heating demand	ON at second stage heating demand

Note: * Operation determined by configuration. See Dip Switch Configuration Table.

Mode Button Operation

OFF: All thermostat outputs are off, fan is still operational if connected to manual fan speed switch.

AUTO: The thermostat automatically selects heating or cooling mode depending on the set point and room temperature. The appropriate HEAT or COOL indicator is enabled in addition to AUTO. A 3°F dead-band is provided to prevent short cycling between heating and cooling modes.

After change-over the control points automatically shift so that the heating OFF-point or the cooling OFF-point equals the set point temperature.

COOL: The thermostat operates as a cooling-only thermostat. The heating outputs are disabled.

HEAT: The thermostat operates as a heating-only thermostat. The cooling outputs are disabled.

If constructed without a mode button, the thermostat operates in Auto mode, subject to configuration of the 2/4 pipe jumper and pipe sensor input.

DAIKIN

Fan Speed Switch Operation

Fan speed is determined by manual selection from fan switch OFF to HIGH, MEDIUM and/ or LOW. In units with the Cycling Fan Option (demand output), the Fan operation (CYCLING vs. CONTINUOUS) is determined by application connections. In OFF position all outputs are off and display blank.

Up/ Down Arrow Operation

A first touch of either arrow will display the set point (a single set point is employed for both heating and cooling). Continued pressure on either arrow will scroll the set point to new values. After three seconds with no pressure on either arrow, the selected set point becomes effective and the display of the room temperature resumes.

Setback Operation

Connection of the Setback Input to 24 VAC 1 will force the control into unoccupied mode (see wiring diagram). Pressing an arrow key or the mode button on the thermostat cover will disable the setback input for one hour.

Pipe Sensor Operation

If cold water is detected, the system will operate in summer mode and the Main output will be cooling. If hot water is detected, the system will operate in winter mode, the Main output will be heating and First Stage Secondary Output will be disabled. In the case of an ambiguous reading, neither hot nor cold, the thermostat will initiate a purge cycle.

Three Wire Floating Valve Operation

Open and Close outputs are used to position the valve. Stroke time is factory set at two minutes. Outputs are off after reaching full on or off position. Valves are periodically reset for accuracy.

Outside Air Damper Operation

This output is ON any time the control is turned ON.

Application Notes

1. When no pipe sensor is used the main output controls cooling and the secondary output controls heating.
2. The pipe sensor should be mounted on the main coil input for water system operation and in the main duct system for forced air operation.
3. The set point and operating mode will be retained on a loss of power.
4. When using either a remote probe or pipe sensor, run wiring away from any electrical motors or power wiring.

Service Menu

Access: Press UP▲ and DOWN▼ arrows for 5 seconds.

Menu Selection: Select 1 to 5 by pressing the mode button or by pressing the UP▲ and DOWN▼ arrows simultaneously.

Adjust Value: Use UP▲ or DOWN▼ arrow.

Table 3: Service Menu Functions

Item #	Function	Range	Default
1	Zone Temp Offset	-5.1°F to 5.1°F	0°F
2	Valve Stroke Time	30 sec. to 5 min.	120 sec.
3	Fan Delay to OFF	0 to 10 min.	0 sec.
4	Compressor Minimum OFF Time	30 sec. to 10 min.	120 Sec.
5	Purge Cycle	0 = Time Based 1 = Temperature Based	1

Figure 3: Circuit Board Jumpers

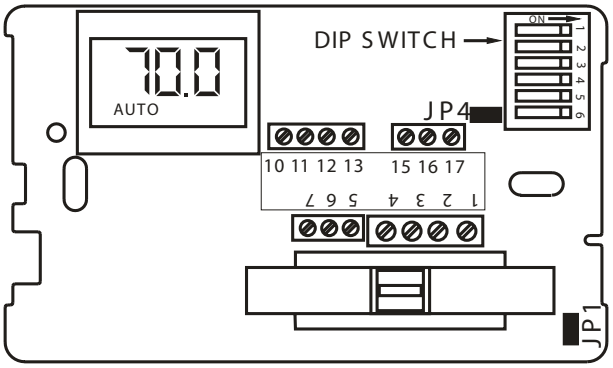

Table 4: Circuit Board Jumper Configuration

Jumper Designation	Jumper Installed ON	Jumper Removed
JP1	Local Sensing	Remote Sensing
JP4	2 Pipe System*	4 Pipe System

Power-Up Operating Sequence

Upon application of power, an MTA158 will go directly to normal operation.

©2014 Daikin Applied | (800) 432–1342 | www.DaikinApplied.com

Addendum Material

DAIKIN

Installation and Maintenance Manual IM 1017

Group: **Applied Air Systems**
Part Number: **910102992**
Date: **October 2013**

MT 168 0-10 VDC/4-20mA Thermostat

Installation

⚠ DANGER

READ THESE INSTRUCTIONS CAREFULLY BEFORE ATTEMPTING TO INSTALL, OPERATE OR SERVICE THIS THERMOSTAT.

Failure to observe safety information and comply with instructions could result in PERSONAL INJURY, DEATH AND/ OR PROPERTY DAMAGE.

To avoid electrical shock or damage to equipment, disconnect power before installing or servicing. Use only wiring with insulation rated for full thermostat operating voltage. Use copper wire only. Insulate or wire-nut all un-used leads. Any wiring, including the remote probe, may carry the full operating voltage of the thermostat.

To avoid potential fire and/ or explosion do not use in potentially flammable or explosive atmospheres.

Retain these instructions for future reference. You must review your application and national and local codes to ensure that your installation will be functional and safe.

⚠ CAUTION

Care should be used to avoid electrostatic discharge to the microprocessor.

This unit has configuration dip switches and jumpers. You may need to reconfigure the thermostat for your application.

1. Install the thermostat with the two furnished mounting screws to a standard 4-1/16" × 2-1/8" square device box with a 2" × 4" adapter ring.
2. For wall installations, mount the thermostat on an inside wall approximately 5 feet above the floor. The location should provide circulation at average room temperature. Avoid direct sunlight or sources of hot or cold air in the room or wall.
3. Remove the cover. Mount thermostat base assembly to the outlet box using screws provided. Tighten the screws evenly but do not overtighten. Connect wires per wiring diagram.
4. To use a remote sensor on units with local sensing capability, remove jumper JP-1 to disable local sensing. Failure to remove JP-1 will cause improper operation of thermostat.
5. Connecting a jumper between terminals 16 and 17 will disable the secondary output and change the main output to heat mode.
6. Connection of a 24 VAC set-back signal will force the control into unoccupied mode (see diagram). Pressing an arrow key or the mode buttons on the thermostat cover will disable the setback input for one hour.
7. Remove the LCD plastic protective film to complete the installation. Reinstall the cover assembly. Install cover locking screw provided.
8. Checkout: After wiring and installation are complete, energize the system and check the operation. Adjust the thermostat as necessary to complete at least one cycle. Be sure the thermostat and all other equipment are functioning correctly.

People and ideas you can trust.™

DAIKIN

Figure 1: Mounting

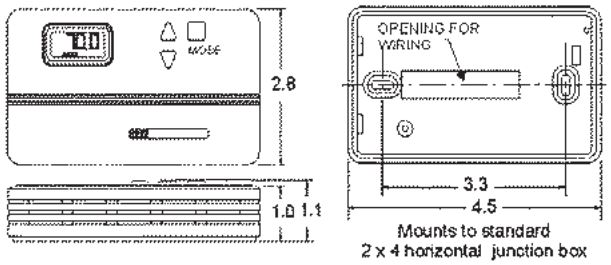

*Figure 2: Typical Wiring**

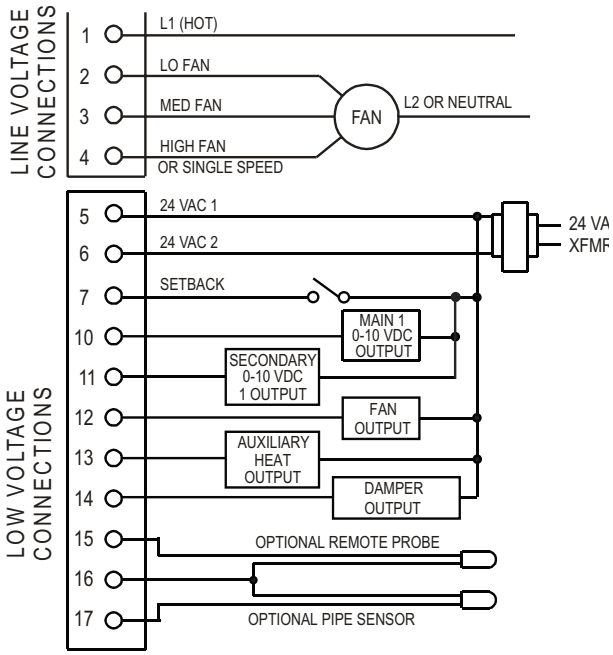

NOTE: Note: * Specific models may have fewer connections.

Electrical Ratings

Table 1: Fan switch (terminals 1-4) line voltage connections

Voltage Rating	Inductive		Resistive Amps	Pilot Duty	Thermostatic Switching
	FLA	LRA			
24 VAC	N.A.	N.A.	N.A.	24 VA	10 VA
120 VAC	5.8	34.8	6.0	125 VA	NA
240 VAC	2.9	17.4	5.0	125 VA	NA
277 VAC	2.4	14.4	4.2	125 VA	NA

Application Notes

1. When no changeover pipe sensor is used, the main output controls cooling and the secondary output controls heating.
2. The fan output, terminal 12, is energized whenever there is a demand for heating or cooling. This output can be connected to a relay that can be used to provide fan cycling to terminal 1.
3. The changeover pipe sensor should be mounted on the main coil input for water system operation and in the main duct system for forced air operation.
4. The set point and operating mode will be retained on a loss of power.
5. When using either a remote probe or pipe sensor, run wiring away from any electrical motors or power wiring.
6. The auxiliary heat output supplies a 24 VAC signal with call for heat. This output is shipped configured for staged heat.
7. The thermostat is shipped with all dip switches in the “ON” (closed) position.
8. The damper output is ON when mode is AUTO, HEAT or COOL. Damper is OFF in set back.

Thermostat Operation

These thermostats are designed to control 0-10 VDC/4-0 mA valves. These units may include a fan switch with one or more fan speed selections.

Mode Button Operation

OFF: All thermostat outputs are off, fan is still operational if connected to a manual fan switch.

AUTO: The thermostat automatically selects heating or cooling mode depending upon the relationship of the setpoint and the room temperature. The appropriate HEAT or COOL indicator is enabled in addition to AUTO. A 3°F dead band is provided to prevent short cycling between heating and cooling modes. After changeover, the control points automatically shift so that the heating OFF-point equals the set point temperature or the cooling OFF-point equals the set point temperature.

COOL: The thermostat operates as a cooling only thermostat. The heating outputs are disabled.

HEAT: The thermostat operates as a heating-only thermostat. The cooling outputs are disabled.

DAIKIN

Fan Speed Switch Operation

Fan speed is determined by manual selection from fan switch OFF to HIGH, MEDIUM and/or LOW. In the OFF position, all outputs are off and the display is blank.

Up/Down Arrow Operation

A first touch of either arrow will display the setpoint (a single set point is employed for both heating and cooling). Continued pressure on either arrow will scroll the setpoint to new values. After three consecutive seconds on either arrow, the selected setpoint becomes effective and the display of the room temperature resumes.

Configuration

Table 2: Circuit Board Jumper Configuration

Jumper	Closed ON*	Open OFF
JP1	Local Sensing	Remote Sensing
JP2	2 Pipe System	4 Pipe System
JP3	Factory Use Only	
JP4	0-10 VOC Main Output	4-20 mA Main Output
JP5	0-10 VOC Secondary Output	4-20 mA Secondary Output

Table 3: Dip Switch Configuration

Switch	Closed ON*	Open OFF
1	Not Use	Not Used
2	Staged Heat 3°F Diff. (Term. 13)	Aux. Heat No Diff. (Term. 13)
3	°F Display	°C Display
4	Main & Sec. Outputs 0-10 VOC (Term. 10 & 11) requires JP4 & JP5	Main & Sec. Outputs 4-20 mA (Term. 10 & 11) Remove JP4 & JP5
5	Operating Position	Not Used
6	Setback= 90°F & 50°F	Setback = 85°F & 60°F

Note: * On is with the dip switch handle to the right. See diagram.

Figure 3: Circuit Board

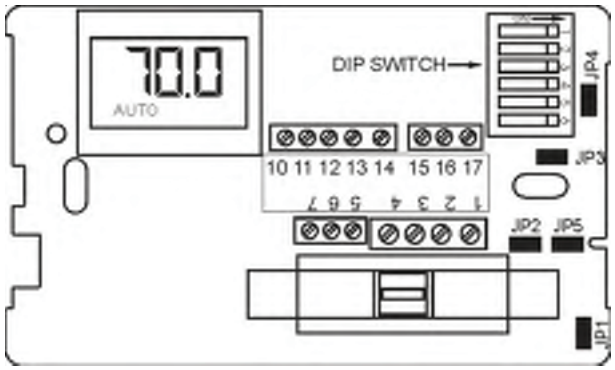

Service Menu:

Access: Press UP▲ and DOWN▼ arrows for 5 seconds.

Menu Selection: Select 1 to 5 by pressing the mode button or by pressing the UP▲ and DOWN▼ arrows simultaneously.

Adjust Value: Use UP▲ or DOWN▼ arrow.

Table 4: Service Functions

Item #	Function	Range	Default
1	Zone Temp Offset	-5.1 °F to 5.1 °F	°0 F
2	Valve Stroke Time	30 sec. to 5 min.	120 sec.
3	Fan Delay to OFF	2 to 10 min.	120 sec.
4	Compressor Minimum OFF Time	30 sec. to 10 min.	120 sec.
5	Purge Cycle	0 = time based 1 = temperature based	1

©2013 Daikin Applied | (800) 432–1342 | www.DaikinApplied.com

Addendum Material

Installation and Maintenance Manual IM 846

Group: **Applied Air Systems**
Part Number: **910102993**
Date: **October 2013**

T170 Thermostat

24 VAC/120–277 VAC

3-Speed Fan Control (Continuous or Cycling) or Staged Fan Control

WARNING

BEFORE ATTEMPTING TO INSTALL, OPERATE, OR SERVICE THIS THERMOSTAT, CAREFULLY READ THESE INSTRUCTIONS.

Failure to observe safety information and comply with instructions could result in PERSONAL INJURY, DEATH, AND/OR PROPERTY DAMAGE.

To avoid potential fire and/or explosion, do not use in potentially flammable or explosive atmospheres.

Retain these instructions for future reference. This product, when installed, is part of an engineered system whose specifications and performance characteristics are not designed or controlled by Daikin. You must review your application and national and local codes to assure that your installation is functional and safe.

DANGER

Hazardous voltage. To avoid electrical shock or damage to equipment, disconnect power before installing or servicing.

Failure to follow these instructions will result in death or serious injury.

Installation

Thermostat Model and Part Number

Daikin offers two different thermostats depending on the fan speed control used (Table 1).

Table 1: Thermostat model and part numbers

Model Number	Part Number	Fan Speed Control
TA170-001	107345335	3-Speed Fan Control
TB170-001	107345336	Staged Fan

Note – For a list of thermostat features, refer to ED 3611.

Optional Occupancy Detection Sensors/ Kits

In addition to the T170 thermostat, Daikin offers optional occupancy detection sensors that can be ordered and used in conjunction with the thermostat. When ordering, use the associated kit number(s)

Table 2: Occupancy sensor model and kit numbers

Model Number	Kit Number
SA200-001	6677877211
SB200-001	6677877311
SD200-001	6677877411
SB200-002	6677877511

Mounting and Wiring the Thermostat

⚠ CAUTION

Before applying power, the voltage selection switch must be in the appropriate position. Failure to select the correct voltage can cause thermostat malfunction or permanently damage the thermostat.

⚠ CAUTION

To use a remote sensor on units with local sensing capability, remove jumper JP1 to disable local sensing. Failure to remove JP1 can cause improper operation of the thermostat with a remote probe installed.

⚠ CAUTION

Use copper wire only. Insulate or wire nut all unused leads. Avoid electrostatic discharge to the thermostat. Failure to do so can cause thermostat malfunction or permanently damage the thermostat.

⚠ DANGER

Hazardous voltage. Combined load current is not to exceed 20 amps. Mount only to a grounded metallic box. Low voltage wiring is Class 2. To avoid electrical shock or damage to equipment, disconnect power before installing or servicing. Failure to follow these instructions will result in death or serious injury.

The thermostat base mounts to a field provided 4" × 4" outlet box with a 2" × 4" mud ring (Figure 1). The thermostat cover assembly mounts to the thermostat base.

1. Disconnect power before installing or servicing.
2. Run line voltage wiring (and low voltage wiring if applicable) into the field provided outlet box and mud ring (Figure 1).
3. Locate all connections within the mud ring/connection box and wire nut all unused wires.
4. Remove the thermostat cover assembly from its base to gain access to the circuit board (Figure 2).
5. On the circuit board, set the voltage selection switch (Figure 2) to the appropriate voltage for the application
   - 24 V = 24 VAC
   - 110–277 V = 120, 240, or 277 VAC.

NOTE: The circuit board is shipped with the voltage selection switch in the 110-227 V position. For 24 VAC use, the switch must be in the 24 V position.

6. The circuit board is also equipped with configuration jumpers (JP1, JP3, and JP4 in Figure 2). Depending on the application, it may be necessary to reconfigure the following jumpers:
   - **JP4:** 2/4 Pipe Sensor Jumper - This jumper selects between 2-pipe (jumper ON) and 4-pipe (jumper OFF) operation (Fan Operation).
   - **JP3:** Door/Window Switch Jumper - This jumper is shipped normally open. Placement of a jumper allows for occupancy detection and door/window switch only operation (Optional Occupancy Detection Equipment Operation).
   - **JP1:** Removal of this jumper allows the sensor to be located in a remote location.
7. Connect the color coded thermostat wires (Figure 3) to the line voltage wires located in the mud ring/connection box and secure the connections with wire nuts.
8. Install the thermostat base to the mud ring/outlet box using two furnished mounting screws. Tighten the screws evenly but do not over tighten.

NOTE: An output ratings chart (Table 3) is located on the inside of the base.

9. With the base now secured, verify that the circuit board is firmly snapped into the cover and is not dislodged.
10. Install the cover assembly to the base, pressing firmly to engage the cover locking snaps.

DAIKIN

Figure 1: Mounting the thermostat

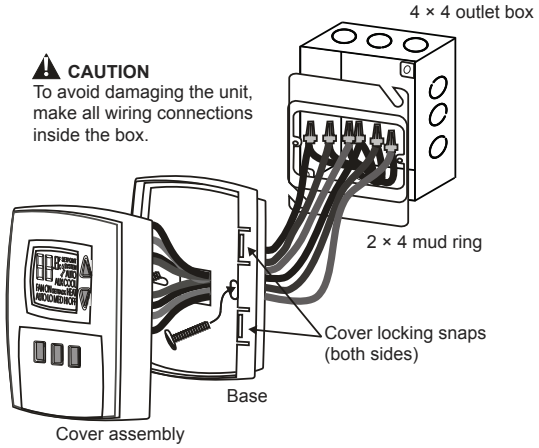

Figure 2: Circuit board

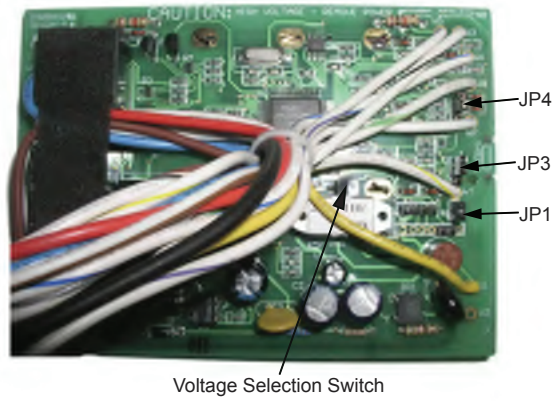

Figure 3: Wiring diagram

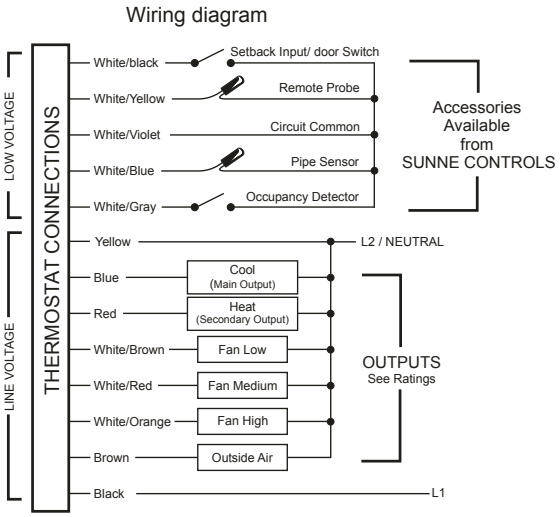

Table 3: Output ratings

Voltage	Inductive		Resistive Amps	Pilot Duty	HP
	FLA	LRA			
24 VAC	NA	NA	NA	24 VA	NA
120 VAC	5.8	34.8	6.0	125 VA	1/4
240 VAC	2.9	17.4	5.0	125 VA	1/4
277 VAC	2.4	14.4	4.2	125 VA	1/4

Operation

Thermostat Button Operation

The thermostat interface (Figure 4) contains buttons for use in navigating to accompanying menus/screens and for performing specific operations. These buttons and operations are described below.

Figure 4: Thermostat interface (model #TA170-001 shown)

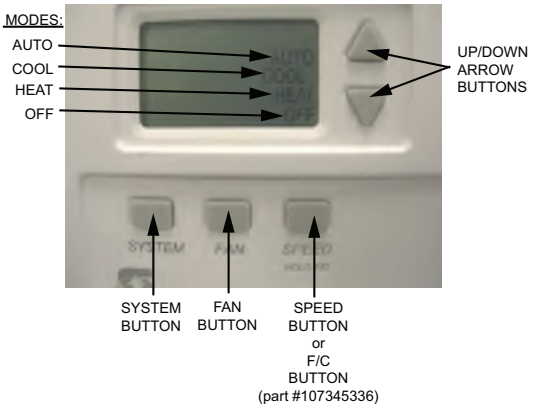

System Button Operation

The System button (Figure 4) contains and displays the following modes of operation:

OFF—All thermostat outputs are off. The fan is still operational if FAN ON is selected.

AUTO—The thermostat automatically selects heating or cooling mode depending on the set point and room temperature. If demand exists, the appropriate HEAT or COOL icon illuminates. A 3°F dead band is provided to prevent short cycling between heating and cooling modes. After changeover, the control point automatically shifts so that the control OFF point equals the set point temperature.

COOL—The thermostat operates as a cooling only thermostat.

HEAT—The thermostat operates as a heating only thermostat.

Up/Down Arrow Button Operation

4. Use the Up▲ and Down▼ arrow buttons (Figure 4) to increase or decrease the temperature.

Fan Button Operation

Use the Fan button (Figure 4) to control operation of the fan. In the ON position, the fan output operates continuously. In the AUTO position, the output cycles with demand. In the OFF position, all outputs are off.

NOTE: Model #TB170-001 (part #107345336) has staged fan control.

Speed Button Operation (TA170-001)

The fan Speed button (Figure 4) for model #TA170-001 (part #107345335) is determined by manually selecting HI, MED, or LO. Press and hold the Speed button for five seconds to toggle the displayed temperature from Fahrenheit to Celsius.

F/C Button Operation (TB170-001)

Model #TB170-001 (part #107345336) is configured for staged fan control and therefore utilizes a F/C button (Figure 4) instead of a Speed button. When pressed, the F/C button toggles between Fahrenheit and Celsius.

Verifying Thermostat Operation

To verify thermostat operation after mounting and wiring it, perform the following:

1. Energize the system.
2. Set the fan to ON.
3. Select each fan speed, if available, to verify operation.
4. Set the system button to AUTO or other available selection.
5. Using the UP▲ arrow, adjust the temperature to more than 5°F above ambient temperature to cycle on heating.
6. Using the DOWN▼ arrow, adjust the temperature to more than 5°F below ambient temperature to cycle on cooling.

Thermostat Menu Functions

The thermostat menu contains nine functions which can be accessed using controls on the thermostat. Accessing the menu functions and details of each function are described below.

Menu Function Access

1. Press and hold the UP and DOWN arrow buttons (Figure 5) for five seconds.
2. The current display clears and the number “1” appears.
3. 3 Press the SYSTEM button to scroll to the next item number.
4. Use the UP and DOWN buttons to make changes within the selected number.

Figure 5: Thermostat menu

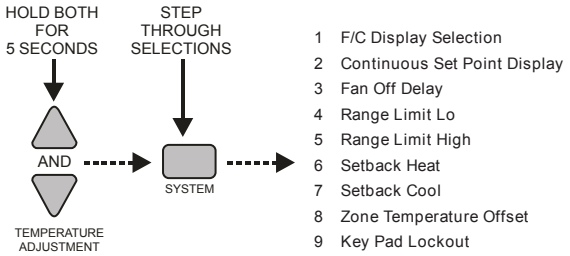

1. **F/C (Fahrenheit/Celsius) display selection:** When this function is selected, the F and C icons appear and the selected icon flashes. To toggle between F or C, press the up or down arrow button.
2. **Continuous set point display:** When this function is selected, the F or C icon, current digits, and the set point icon appear. If the Continuous set point display is enabled, the set point icon flashes. To toggle between continuous display of set point and display of zone temperature, press the up or down arrow button.
3. **FAN OFF delay:** When this function is selected, the FAN, OFF, and digits appear. The digits represent the number of seconds the fan stays on after the heating and cooling outputs are turned off. To increase or decrease the value from 0–255 seconds, press the up or down arrow button.
4. **Range limit low:** When this function is selected, the current minimum range setting, the SET POINT icon and the LO icon appear. To increase or decrease the value, press the up or down arrow button.
5. **Range limit high:** When this function is selected, the current maximum temperature range adjustment, SET POINT icon, and LO icon appear. To increase or decrease the value, press the up or down arrow button.

6. **Set back heat:** When this function is selected, the current temperature range adjustment, the SET BACK icon, and the HEAT icon appear. To increase or decrease the value, press the up or down arrow button.
7. **Set back cool:** When this function is selected, the current Cool setback value, the SET BACK icon, and the COOL icon appear. To increase or decrease the value, press the up or down arrow button.
8. **Zone temperature offset:** When this function is selected, the numeric ones and tenths (0.0) appear with a leading minus sign. To increase or decrease the value +/– 9°F, press the up or down arrow button. Increments are made in 1°F and 0.5°C.
9. **Keypad lockout:** When this function is selected, the ON and OFF icons appear. The enabled icon flashes. OFF is the default. ON disables the keypad except for entry into the service menu. To increase or decrease the value, press the up or down arrow button.

NOTE: In the event of a power failure, these values are stored and can be recalled.

Condensate Overflow Interrupt

The remote probe input can be used with a condensate overflow switch (CO), either in conjunction with a remote probe (normally closed CO switch, Figure 6), or with local sensing (normally open CO switch, Figure 6). When the condensate switch activates, the thermostat displays a service wrench icon and disables all outputs.

Figure 6: Local and remote probe installation

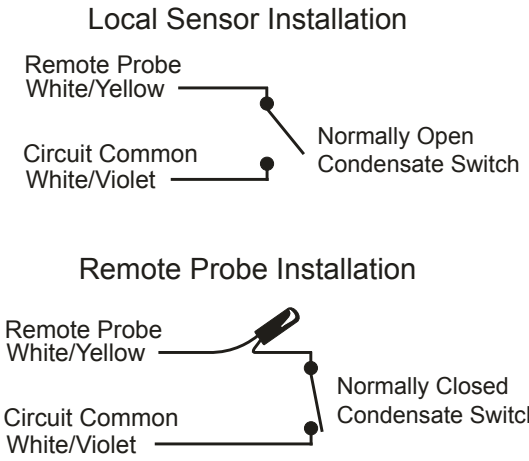

Fan Operation

The thermostat may be factory configured for standard or staged fan operation.

Standard Fan Configuration (TA170-001)

Units with standard fan operation (Figure 7) have a selectable fan Speed button.

Figure 7: Standard fan operation

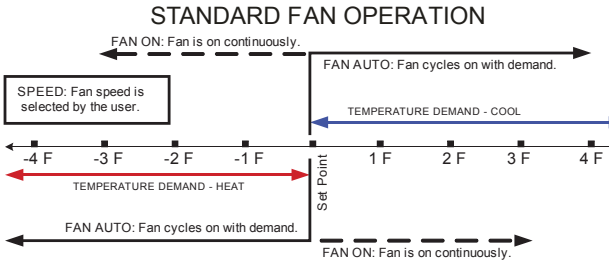

Staged Fan Configuration (TB170-001)

Factory configuration is available for staged fan operation (Figure 8) to provide occupant comfort while using the most effective fan speed.

Figure 8: Staged fan operation

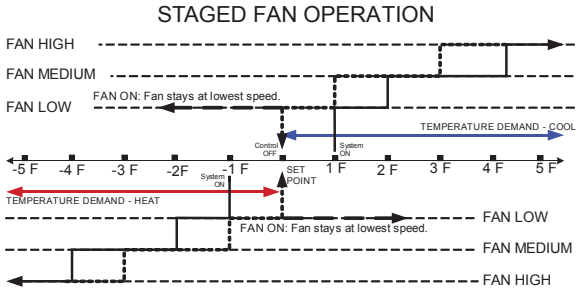

Controlled Off Factory Configuration

A factory configuration may be provided for minimum heating and cooling requirements. Using this configuration, the HEAT and COOL outputs are automatically cycled on at the heat setback limit. Your thermostat may not have this feature.

Fan Coil Operation

Fan Coil operation is either a 2-pipe or 4-pipe configuration which is determined by jumper selection JP4 (Mounting and Wiring the Thermostat).

2-Pipe Operation

In this configuration, the thermostat permanently disables the secondary output and disables the fan from cycling in an invalid mode. The main output configuration is dependent on the pipe sensor input. With a pipe sensor connected, the thermostat automatically selects heating or cooling depending on the sensed water temperature. If the pipe sensor input is open (unconnected), the main output only cools. If the pipe sensor input is shorted, the main output only heats. Normal thermostat default is for 4-pipe operation. For 2-pipe operation, install a jumper on JP4.

4-Pipe Operation

In this configuration, both the main output (COOL) and the secondary output (HEAT) are available. These both cycle ON depending on the mode of the thermostat. With a pipe sensor connected, the thermostat automatically changes the main output to heat and disables the secondary output if the main coil water is hot. For 4-pipe operation, the JP4 jumper is removed.

Pipe Sensor Operation

A pipe sensor can be connected when the thermostat is configured for either 2-pipe or 4-pipe configuration. The pipe sensor is used to determine the water temperature in the main coil, which should be connected to the primary output.

Pipe sensor input—use a 10K Remote Probe or a standard ON-OFF Aquastat for summer/winter changeover.

Purge Cycle

With a pipe sensor connected, the thermostat initiates a purge cycle if the sensed water temperature is ambiguous (not adequately hot or cold). The sequence for purge cycle operation is as follows:

1. The thermostat has a call for heat or cooling.

NOTE: If at any time the call goes away, the thermostat stops the purge cycle.

2. The thermostat checks the pipe sensor to verify water temperature.
3. If the water temperature is beyond 15°F of the set point, normal HVAC control occurs.
4. If the water temperature is not beyond 15°F of the set point, the thermostat checks to see if the water temperature is above 80°F or below 60°F.

   If yes, normal HVAC control occurs.

   If no, the thermostat opens the main output (COOL) for three minutes.
5. After the three minute purge cycle occurs, the thermostat checks to see if the water temperature is more than 15°F from the set point, or above 80°F, or below 60°F.

   If yes, normal HVAC operation occurs.

   If no, the valve is left open and the thermostat continues to search for a valid reading.

NOTE: If at any time the demand goes away, the thermostat will stop the purge cycle.

Table 4 shows output operation, depending on the sensed water temperature.

Table 4: Output operation

2-Pipe/4-Pipe Selection	Water Temperature	Output Operation	
		Main Output	Secondary Output
2-pipe JP4 ON	Cold	Cooling only The fan does not cycle ON with a heat demand.	Disabled
	Hot	Heating only The fan does not cycle ON with a cool demand.	Disabled
4-pipe JP4 OFF	Cold	Cooling	Heating
	Hot	Heating only The fan does not cycle ON with a cool demand.	Disabled

Setback Operation

In this configuration, the low level switch input normally is open. To enable setback operation, the JP3 jumper is removed (Mounting and Wiring the Thermostat). The input will close and the thermostat heating and cooling setback limits can then be used as temperature control points. Fan operation in setback is cycled with demand. Press any thermostat key to override setback for one hour. Setback overrides any user setting except if the control is turned to OFF.

Optional Occupancy Detection Equipment Operation

The T170 thermostat can be used with optional S200 series occupancy detection equipment. Purchasing and installing this equipment to compliment the thermostat adds energy savings by setting back HVAC operation during occupied and unoccupied times. Optional detection equipment configurations and operation are described below.

SB200-001 Occupancy Sensor

The SB200-001 occupancy sensor (Figure 9) serves as an occupancy sensor for automatic control of a guest room HVAC system. It incorporates an innovative dual delay processor which allows the sensor to verify the nature of occupancies, and is capable of eliminating unnecessary actuations of the HVAC device due to unintentional passages or short time occupancies. The sensor may also serve as a slave sensor (Figure 11).

The sensor switch is open in occupied mode and closed in unoccupied mode. An optional door and/or window switch (Figure 9) is open when the door/window is open and is closed when the door/window is closed.

NOTE: To use this configuration, a jumper must be installed to JP3 to allow occupancy input.

An optional door and/or window switch (Figure 9) can be added for use with the SB200-001 sensor.

Operation

In an occupied mode, the thermostat operates normally and looks for a door open signal. When the door opens, the thermostat waits for a door close signal. If the door is open for more than two minutes, the thermostat turns the HVAC system outputs to OFF. During this two minute period, if any button is pressed on the keypad, the time delay is extended to ten minutes. The time delay can only be extended once. Once the HVAC outputs transition to OFF, a door closure is required to re-enable the outputs. When the door closes, the thermostat starts a two minute timer and tries to detect occupancy. If the timer expires and no occupancy is detected, the thermostat transitions to an unoccupied state. If occupancy is detected while the timer is running, the thermostat will remain in the occupied mode.

In an unoccupied mode, the thermostat sets heating and cooling set points to setback values as determined by factory or user settings. The fan is automatically set to cycle with demand. The thermostat continually monitors the occupancy sensor and will enter into occupied mode if occupancy is detected.

If the installation is only using a door/window switch, the thermostat will disable the HVAC outputs if this output is open for longer than two minutes.

To enable door/window switch only operation, install a jumper to JP3 (Mounting and Wiring the Thermostat) and the occupancy input must be shorted to circuit common.

Figure 9: Optional equipment configuration #1

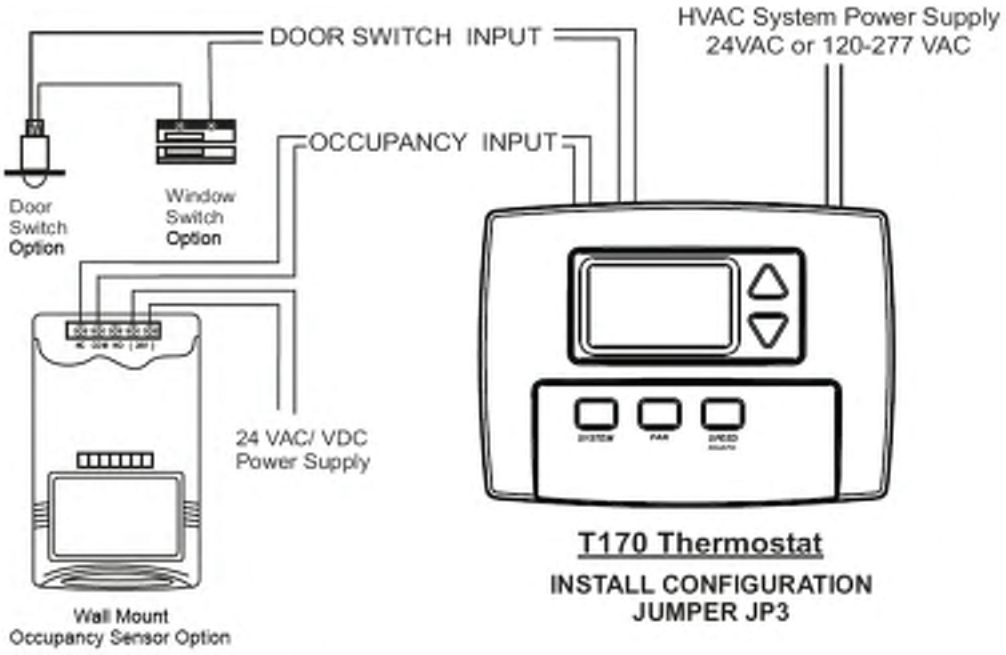

SD200-001 Occupancy Sensor

The SD200-001 occupancy sensor (Figure 10) serves as a master sensor for a guest room HVAC management system. The sensor provides HVAC operation according to occupancy status, as well as door/window switch monitoring, selectable high/low temperature setback, form-C output, slave sensor connectivity, and a five minute door open HVAC shut-off.

NOTE: To use this configuration, the jumper to JP3 is removed to allow setback input.

An optional door and/or window switch (Figure 10) and slave sensor can be added for use with the SD200-001 sensor.

Operation

In an occupied mode, the SD200-001 occupancy sensor (Figure 10) and door switch use advanced microprocessor logic to determine occupancy. A door open signal will initiate occupancy status detection. If the sensor determines that a room is occupied, it will allow normal HVAC control. The sensor will wait for another door open signal before determining occupancy again.

In an unoccupied mode, the sensor continually monitors the room. Any occupancy detection will set the operation to occupied mode.

Figure 10: Optional equipment configuration #2

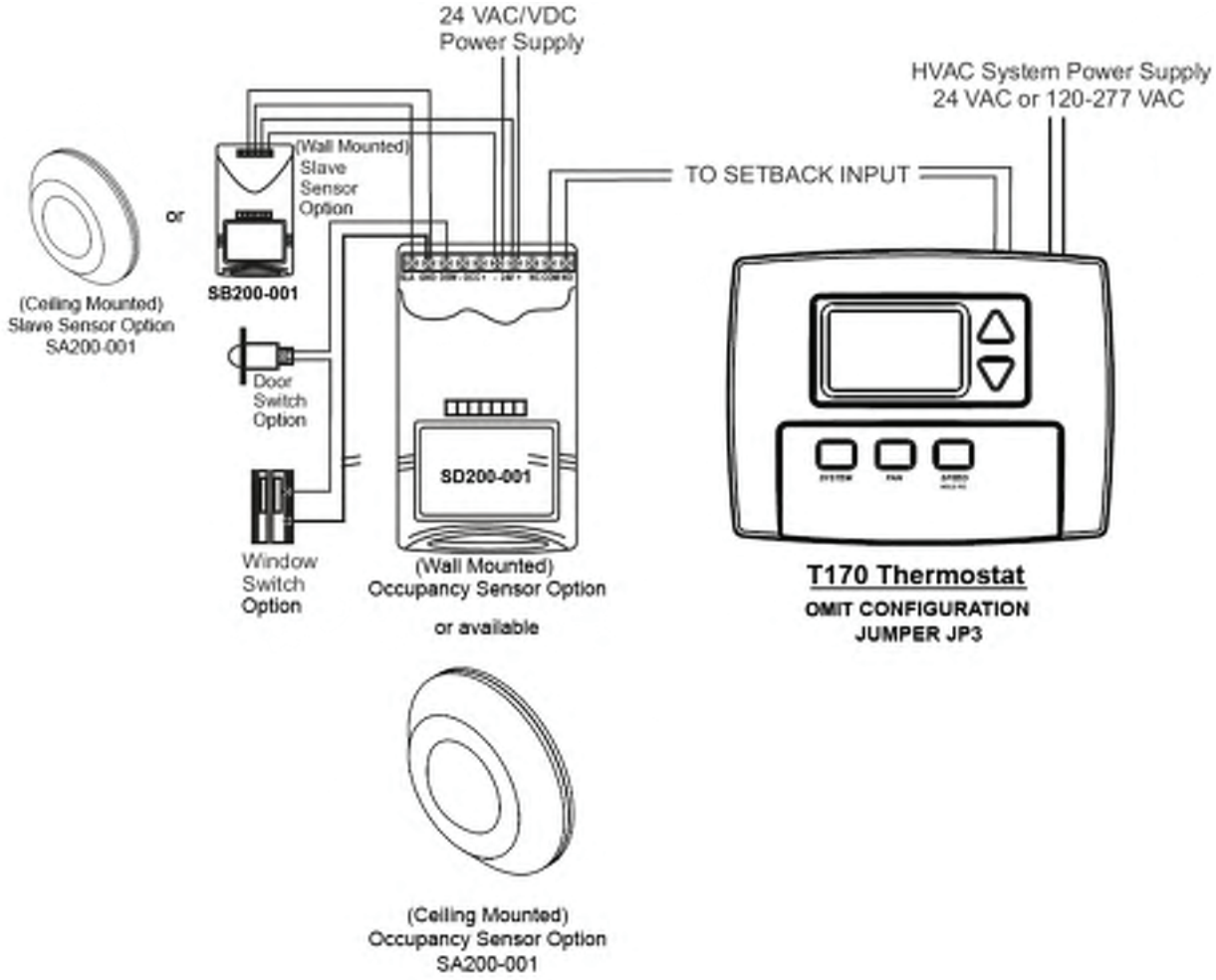

SD200-002 Occupancy Sensor

The SD200-002 occupancy sensor serves as a stand alone master sensor for a guest room HVAC management system. The sensor provides HVAC operation according to occupancy status, as well as selectable high/low temperature setback, form-C output, and a five minute door open HVAC shut-off. This system provides basic room setback and is ideal for control of HVAC in commercial spaces.

NOTE: To use this configuration, the jumper to JP3 is removed to allow setback input.

Operation

With each occupancy detection, an OFF delay is started and can be set to delay for up to 30 minutes.

Figure 11: Optional equipment configuration #3

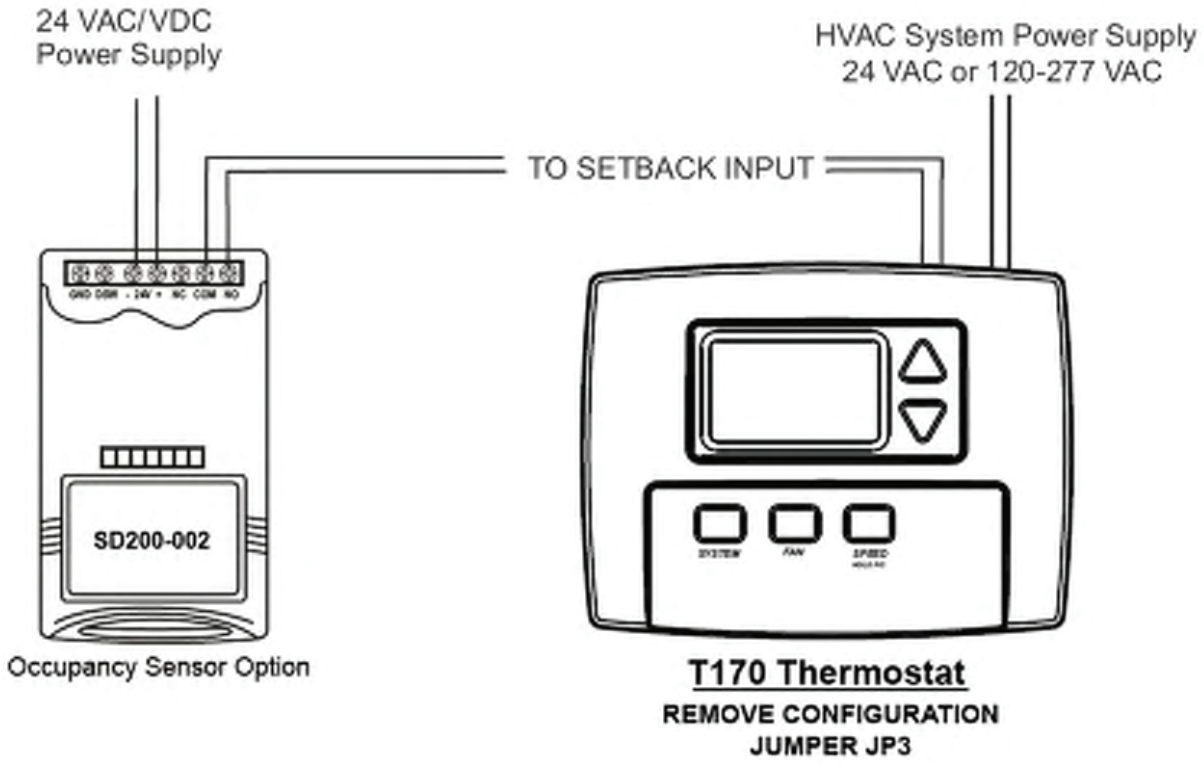

©2013 Daikin Applied | (800) 432–1342 | www.DaikinApplied.com

Addendum Material

Installation and Maintenance Manual IM 1019

Group: **Fan Coil**
Part Number: **IM 1019**
Date: **October 2011**

MT 180 Programmable Thermostat

Installation Instructions 3
Applications and Features 3
Specifications 4
Thermostat Model and Part Number 4
Optional Sensors/Kits 4
Installing, Mounting and Wiring the Thermostat . . . 5
Operation 7
Front Panel Reference 7
Display Reference 7
Saving Changes 8
Up/Down Arrow Button Operation 9
System Button Operation 9
Fan Button Operation 9
Program Button Operation 9
Function Overview 9
Setting the Clock & Day 10
Setting the Temperature Display 10
Copy Feature 10
Thermostat Configuration/ Service Menu 10
Programming Time & Temperature Settings 10
Custom Program 11
Time & Temperature Programming Example 11
Overriding the Program 12
System Check-out 12
Condensate Overflow Interrupt 12
Technical and Application Notes 13
Fan Operation 13
Standard Fan Operation 13
Staged Fan Operation with Temperature Demand 13
Fancoil Operation 14
Pipe Sensor Operation 14
Purge Cycle Operation 14
Time-Based Purge (Default) 14
HVAC Setback Systems 14
Setback Operation - Remove JP3 14
Door Switch Only Operation - Install JP3 14
Optional Occupancy Detection Equipment Operation 15
Occupancy Operation (Install JP3) 15
Operation from an Occupied Mode 15
Operation from an Unoccupied Mode 15
SB200-001 Occupancy Sensor 16
SD200-001 Occupancy Sensor 17
SD200-002 Occupancy Sensor 17
Annex I 18
Annex II 19

⚠ WARNING

READ THESE INSTRUCTIONS CAREFULLY BEFORE ATTEMPTING TO INSTALL, OPERATE OR SERVICE THIS THERMOSTAT.

Failure to observe safety information and comply with instructions could result in PERSONAL INJURY, DEATH AND/OR PROPERTY DAMAGE.

To avoid electrical shock or damage to equipment, disconnect power before installing or servicing and use only wiring with insulation rated for full thermostat operating voltage.

Before installing this control, the Voltage Selection Switch must be placed in the correct position. See instructions. To avoid potential fire and/or explosion do not use in potentially flammable or explosive atmospheres.

Retain these instructions for future reference. This product, when installed, will be part of an engineered system whose specifications and performance characteristics are not designed or controlled by PECO. You must review your application and national and local codes to assure that your installation will be functional and safe.

⚠ CAUTION

- Use copper wire only, insulate or wire nut all unused leads.
- Care should be used to avoid electrostatic discharge to the T180 thermostat.
- This unit has configuration jumpers. You may need to reconfigure this thermostat for your application

Applications and Features

For 2 or 4 Pipe Fan Coil and ON/OFF Control Applications

- 7 Day, 4 Event Programmability
- System Selection: OFF-Heat-Cool-Auto-Setback
- 6 Outputs: 1H, 1C, Up to 3 Fan, OA Damper
- Fan Control: 1-3 Speeds
  - Cycling (Auto) or Continuous (ON)
  - Automatic Fan Speed Staging (TB180 models only)

Connections for:

- Fan Coil Pipe Sensor
- Remote Temperature Probe
- Occupancy Control
- Door Switch or Setback
- Condensate Overflow

Specifications

Table 1: MT180 Programmable Thermostat Specifications

Temperature Set Point Range	50 to 90°F / 10 to 32°C
Differential	1°
Memory – Back-Up	EEPROM, No batteries required, Stores settings for unlimited time
Mounting	Installs on standard 4" × 4" device box with a 2" × 4" horizontal mud ring
Physical Dimensions	4.4"(h) × 5.8"(w) × 1.1"(d)
Agency Approvals	UL, UL Canada
Electrical Ratings	(see Ratings table)

Figure 1: MT180 Programmable Thermostat Dimensions

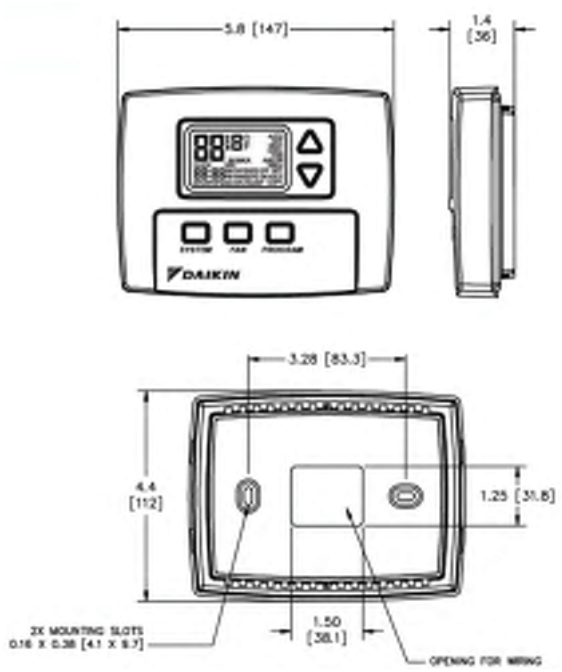

Thermostat Model and Part Number

Daikin offers two different 7-Day Programmable Digital Heating/Cooling Thermostat with constant fan or Fan cycled, On/Off Valve Control depending on the fan speed control used (See Table 2).

Table 2: Thermostat Model and Part Number

Model Number	Part Number	Fan Speed Control
TA180-001	910119110	3-speed fan control
TB180-001	910119111	Staged fan control

Optional Sensors/Kits

In addition to the T180 thermostat, Daikin offers optional sensors for occupancy detection (page 14 and page 15) and 10K pipe sensor page 12) that can be ordered and used in conjunction with the thermostat. Use the associated kit number(s) provided in Table 3 when ordering.

Table 3: Sensor Model and Kit Numbers

Sensor Model Number		Daikin Part Number
Occupancy Detection Sensor	SB200-001	6677877311
	SD200-001	6677877411
	SD200-002	6677877511
10K Pipe Sensor		107201601

Installing, Mounting and Wiring the Thermostat

⚠ CAUTION

Before applying power, the voltage selection switch must be in the appropriate position. Failure to select the correct voltage can cause thermostat malfunction or permanently damage the thermostat.

⚠ CAUTION

To use a remote sensor on units with local sensing capability, remove jumper JP1 to disable local sensing. Failure to remove JP1 can cause improper operation of the thermostat with a remote probe installed.

⚠ CAUTION

- Use copper wire only. Insulate or wire nut all unused leads.
- Avoid electrostatic discharge to the thermostat.
- Failure to do so can cause thermostat malfunction or permanently damage the thermostat.

⚠ DANGER

Hazardous voltage. Combined load current is not to exceed 20 amps. Mount only to a grounded metallic box. Low voltage wiring is Class 2. To avoid electrical shock or Damage to equipment, disconnect power before installing or servicing. Failure to follow these instructions will result in death or serious injury

Figure 2: Mounting the Thermostat

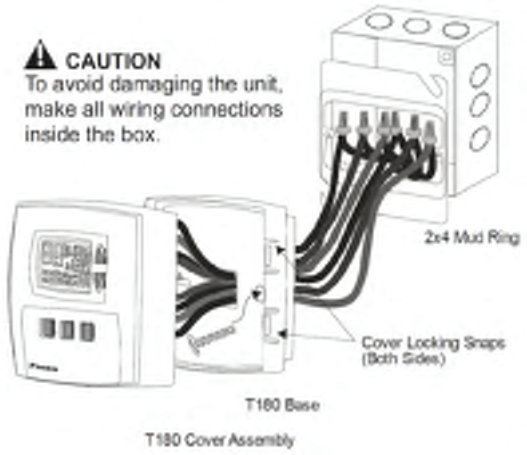

Figure 3: Circuit Board

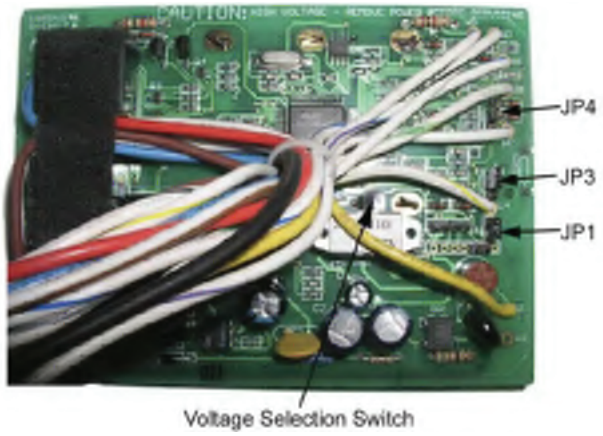

The thermostat should be used indoors only. It should be mounted on an inner wall in a location with freely circulating air, and where it will be responsive to changes in room temperature. Avoid mounting near heat generating appliances (i.e. TV, heater, refrigerator), or in direct sunlight.

The thermostat base mounts to a field provided 4” × 4” outlet box with a 2” × 4” horizontal mud ring. The thermostat cover assembly mounts to the thermostat base.

1. Disconnect power before installing or servicing.
2. Run line voltage wiring (and low voltage wiring if applicable) into the field provided outlet box and mud ring (Figure 2).
3. Locate all connections within the mud ring/connection box and wire nut all unused wires.
4. Remove the thermostat cover assembly from its base to gain access to the circuit board (Figure 3).
5. On the circuit board, set the voltage selection switch (Figure 3) to the appropriate position prior to application of power.
   - 24V = 24 VAC
   - 110-277 V = 120, 240 or 277 VAC

NOTE: The circuit board is shipped with the voltage selection switch in the 110-227 V position. For 24 VAC use, the switch must be in the 24 V position

6. The circuit board is also equipped with configuration jumpers (JP1, JP3, and JP4 in Figure 3). Depending on the application, it may be necessary to reconfigure the following jumpers:

   JP1 Jumper Selection – Remote Temperature Sensor

   Local Sensing – Install JP1

   Remote Sensing – Remove JP1 – Accessory sensors are available in standard 60" lengths but can be extended to meet application requirements.

   JP3 Jumper Selection – HVAC Setback Systems

   The JP3 jumper allows the T180 to be configured for Setback, Occupancy Detection or Door Switch Only Occupancy Operations. For further descriptions of these conditions please see the Technical and Application Notes, page 12.

   - Setback Operation - Remove JP3
   - Occupancy Detection - Install JP3
   - Door Switch Only - Install JP3

   JP4 Jumper Selection – 2 or 4 Pipe Operation

   Connection of a pipe sensor will change the operation of the outputs as shown in Table 4. (See Technical Notes for further information on Pipe Sensor Operation, page 12)

   - 2-Pipe Operation - Install JP4 - The thermostat will permanently disable the Secondary Output and disables system and fan invalid modes.
   - 4-Pipe Operation - Remove JP4 - Both the Main Output (COOL) and Secondary Output (HEAT) will be available.

7. Connect the color coded thermostat wires (Figure 4) to the line voltage wires located in the mud ring/connection box and secure the connections with wire nuts.
8. Install the thermostat base to the mud ring/outlet box using two furnished mounting screws. Tighten the screws evenly but do not over tighten.

NOTE: Note: An output ratings chart (Table 5) is located on the inside of the base.

9. With the base now secured, verify that the circuit board is firmly snapped into the cover and is not dislodged.
10. Install the cover assembly to the base, pressing firmly to engage the cover locking snaps.

Figure 4: Wiring Diagram

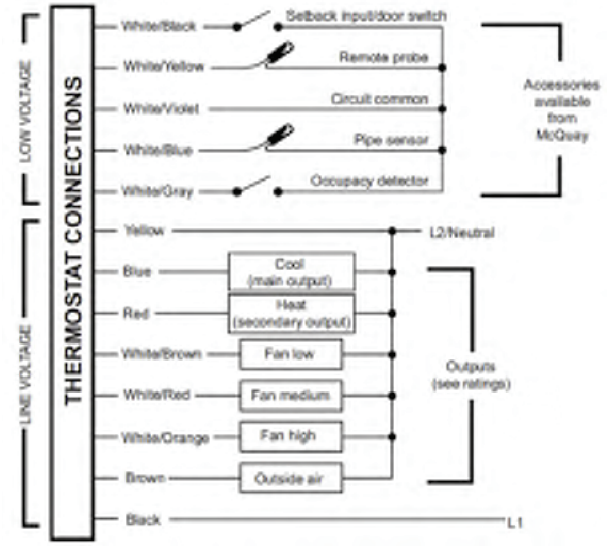

Table 4: Jumper Activation

JP4 Section	Pipe Sensor Water Temp	Aqua Stat	Main Output (Blue Wire)	Secondary Output (Red wire)
2-Pipe	Cold	Open	Cooling Only	Disabled
JP4-ON	Hot	Closed	Heating Only	Disabled
2-Pipe	Cold	Open	Cooling	Heating
JP4-OFF	Hot	Closed	Heating Only	Disabled

NOTE: *Fan will not cycle on for disabled modes.

Table 5: Output Ratings

Voltage	FLA	LRA	RES Amps	Pilot Duty	HP
24 VAC	NA	NA	NA	24 VA	NA
120 VAC	5.8	34.8	6.0	125 VA	¼
240 VAC	2.9	17.4	5.0	125 VA	¼
277 VAC	2.4	14.4	4.2	125 VA	¼

Combined Load Current Not to Exceed 20 Amps

Front Panel Reference

Figure 5: MT180 Programmable Thermostat Interface

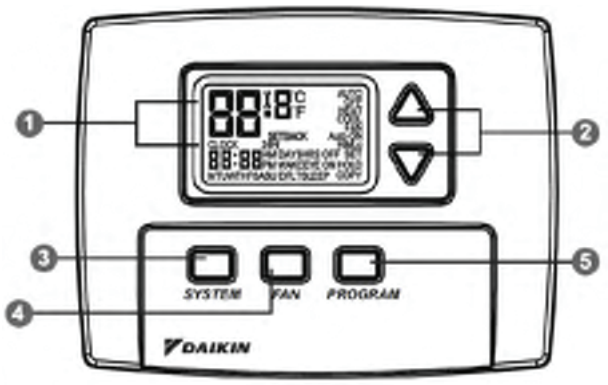

The thermostat interface (Figure 5) contains buttons for use in navigating to accompanying menus/screens and for performing specific operations. These buttons and operations are described below.

1. Liquid Crystal Display with a blue backlight
2. UP .and DOWN .Buttons
3. SYSTEM Button
4. FAN Button
5. PROGRAM Button.

Display Reference

Figure 6: MT180 Programmable Thermostat Display

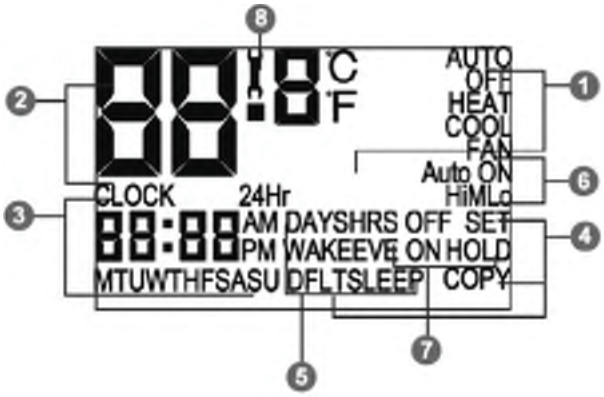

1. System Mode Display (See Table 6)
2. Temperature Display (See Table 7)
3. Time and Day Display (See Table 8)
4. Programming Commands (See Table 9)
5. Time Period Indicators

   WAKE, DAY, EVE, and SLEEP are the names given to the four time periods per day. Each time period has its own unique setpoint temperatures as shown in Table 15.
6. Fan Operation Indicators (See Table 10)
7. Program Override Commands (See Table 11)
8. Service Indicator

   The wrench symbol is displayed when there is a temperature sensor error or condensate overflow error. It indicates there is an open or a short connection to the sensor switch. When this occurs, the thermostat will disable all outputs and illuminate the wrench symbol. A service technician should be called to determine the cause of the error.

Table 6: System Mode Display Overview

Menu	Description
HEAT	Indicates the system is in heating mode
COOL	Indicates the system is in cooling mode
AUTO	Indicates the system will automatically changeover between heating and cooling modes as the room temperature varies
OFF	Turns OFF the entire system
SETBACK	Indicates the heating or cooling system is operating in setback mode. Setback mode is an energy saving feature that can be either manually activated by the thermostat's user, or automatically activated by an occupancy sensor or door switch

Table 7: Temperature Display Overview

Menu	Description
Default Display	Digits display the current room temperature
During Programming	Digits are used to set the desired temperatures

Table 8: Time and Day Display Overview

Menu	Description
Default Display	Digits indicate the current time, and day abbreviations indicate the current day
During Programming	Digits and days are used to program time periods
CLOCK	Lights up during programming when the clock is being set
24Hr	Lights up during programming to indicate time will be displayed in 24-hour clock format
AM/PM	Indicates 12-hour clock format

Table 9: Programming Commands Overview

Menu	Description
SET	Enters thermostat into custom program mode which allows you to specify a unique times and temperatures for a particular day or group of days
COPY	Simplifies programming by allowing you to copy all of an individual day's settings to another day or group of day
DFLT	Restores the thermostat to the factory program

Table 10: Fan Operation Indicators Overview

Menu	Description
FAN	"FAN" will be always be lit in conjunction with "ON" or "AUTO"
ON	Indicates constant, continuous fan operation
AUTO	Indicates fan is only on with heating or cooling demand
HI	Indicates high speed fan; always lit in conjunction with "ON" or "AUTO"
M	Indicates medium speed fan; always lit in conjunction with "ON" or "AUTO"
LO	Indicates low speed fan; always lit in conjunction with "ON" or "AUTO"

Table 11: Program Override Commands Overview

Menu	Description
HOLD	Indicates thermostat is in manual operation. (Programmed settings are OFF, but not lost)
HOLD HRS	During programming, lights up in conjunction with clock digits; allows program to be put on hold for up to 24 hours
HOLD DAYS	During programming, lights up in conjunction with the clock digits; allows program to be put on hold for up to 99 days
HOLD ON	Indicates thermostat is in permanent manual operation
OFF	Turns OFF the hold and resumes programmed settings

Saving Changes

As you navigate your thermostat, be aware of the thermostat's save and exit protocol:

- The thermostat automatically saves all the changes you make, as you make them.
- When you are in the SYSTEM or FAN menus:
  - — If you push a button that is not applicable to the current menu, all changes are saved and the thermostat goes to the menu associated with the button that was pushed.
  - — If the thermostat is idle for five seconds, the thermostat times out, saves all changes, and returns to the thermostat's default display.
- When you are in the PROGRAM menu:
  - — If you push a button that is not applicable to the current menu, nothing happens (your programming is not interrupted).
  - — If the thermostat is idle for fifteen seconds, the thermostat times out, saves all changes, and returns to the thermostat's default display.

Up/Down Arrow Button Operation

The ▲ and ▼ buttons function in two ways:

- When you are in the default display, you can press ▲ to increase, or ▼ to decrease, the current temperature set-point. This will override programmed temperature settings until the next programmed time period (Wake, Day, Evening, or Sleep).
- When you are in the PROGRAM menu, you can press ▲ to scroll up, or ▼ to scroll down, through the menu, time, and temperature options.

System Button Operation

Pressing SYSTEM will light up the five system mode options described below. Press SYSTEM to scroll through the options. As you scroll, the current option will be blinking. To select the blinking option, wait for the five-second timeout, which saves your option and returns you to the thermostat's default display.

Table 12: System Button Operation Overview

Menu	Description
HEAT	The thermostat operates as a Heating Only thermostat
COOL	The thermostat operates as a Cooling Only thermostat
AUTO	The thermostat automatically selects the appropriate Heat or Cool mode depending upon the setpoint (desired temperature) and zone temperature (actual temperature)
OFF	Turns the system OFF by disabling all thermostat outputs
SET BACK	Setback mode is an energy saving feature that minimizes the heating and cooling when the room is not occupied. Setback mode overrides the programmed time and temperature settings by telling the thermostat to instead use the setback setpoint for heating and cooling. The setback setpoint temperatures are factory default or installer-selected during installation. During setback mode, when a demand for heating or cooling exists, the fan will run at the lowest speed. • Automatic setback mode: If your thermostat is connected to an occupancy sensor or door switch, setback mode is automatically turned on and off by the sensor or door switch. • Manual setback mode: Select SETBACK in the SYSTEM menu. Setback temperature settings will remain in effect until you manually turn off setback mode. Selecting HEAT, COOL, or AUTO in the SYSTEM menu will turn off setback and resume your programmed time and temperature settings. **NOTE:** SETBACK appears on your menu only if the thermostat's installer enabled this feature.

Fan Button Operation

Pressing FAN will light up the six fan mode options described below. Press FAN to scroll through the options. As you scroll, the current option will be blinking. To select the blinking option, wait for the five-second timeout, which saves your option and returns you to the thermostat's default display.

Table 13: Fan Button Operation Overview

Menu	Description
ON HI	High speed fan is on continuously, even if no demand for heating or cooling exists
ON M	Medium speed fan is on continuously, even if no demand for heating or cooling exists
ON LO	Low speed fan is on continuously, even if no demand for heating or cooling exists
AUTO HI	High speed fan cycles with active demand for heating and cooling
AUTO M	Medium speed fan cycles with active demand for heating and cooling
AUTO LO	Low speed fan cycles with active demand for heating and cooling

Program Button Operation

Function Overview

Pressing PROGRAM lights up five program mode options, described below. Press ▲ or ▼ buttons to scroll through the options. As you scroll, the current option will be blinking. To select the blinking option, press PROGRAM again and you will be taken to the menu associated with that option.

Table 14: Program Button Operation Overview

Menu	Description
CLOCK	Sets the current time and day.
°F / °C	Use this option to change the temperature display to Fahrenheit or Celsius. Your thermostat's default temperature display setting is Fahrenheit.
SET	Use to specify the time and temperature programming for a particular day or group of days. Also allows you to reset the thermostat to the factory default ENERGY STAR program.
COPY	Simplifies programming by allowing you to copy a particular day's program to another day or group of days.
HOLD	Puts the thermostat in manual operation for a permanent or temporary time period. Overrides your programmed settings, but does not lose them.

Setting the Clock & Day

1. Press PROGRAM once.
2. Press ▲ or ▼ to scroll until “CLOCK” is blinking. To select, press PROGRAM once.
3. Press ▲ or ▼ to scroll through “24Hr”, “AM”, “PM” options. “24Hr” sets your thermostat to a 24-hour clock. “AM” and “PM” sets your thermostat to a 12-hour clock. To select your preference, press PROGRAM once.
4. Press▲ or▼ to scroll to the current hour. To select, press PROGRAM once.
5. Press ▲ or ▼ to scroll to the current minute. To select, press PROGRAM once.
6. Press ▲ or ▼ to scroll to the current day. To select, press PROGRAM once.

Your selections have been saved and you have exited program mode. Your thermostat is ready to function with the factory preprogrammed ENERGY STAR® program. If you want to change the program for your particular needs, follow the instructions in the “Programming Your Thermostat” section.

Setting the Temperature Display

1. Press PROGRAM once.
2. Press ▲ or ▼ to scroll until “°F °C” is blinking. To select, press PROGRAM once.
3. Both “°F” and “°C” will be lit, but only one will be blinking. Press .or .to scroll so that the preferred option is blinking. To select, press PROGRAM once.

Your selection has been saved and you have exited program mode.

Copy Feature

1. Press PROGRAM once.
2. Press ▲ or ▼to scroll until “COPY” is blinking. To select, press PROGRAM once.
3. Press ▲ or ▼ to scroll to the individual day you want to copy from. “DFLT” (the default Factory Program) is also a copy option. To select your preference, press PROGRAM once.
4. Press ▲ or ▼to scroll to the day or group of days you want to copy to. To select, press PROGRAM once.

Your selection has been saved and you have exited program mode.

Thermostat Configuration/ Service Menu

To enter the Service Menu press the UP and DOWN arrows simultaneously for five (5) seconds. The current display icon will be turned off.

Service menu number 1 will appear. Push the SYSTEM button to move to the next Service Menu number. The UP and DOWN arrow keys will scroll through your range of options for each feature. All changes to the Service Menu are automatically saved when the system times out. Please refer to the service menu table (Annex II, page 17).

Programming Time & Temperature Settings

Your thermostat’s programming feature allows you to divide up a 24-hour day into four time periods (referred to as “Wake”, “Day”, “Evening”, and “Sleep”), and give each time period its own setpoint temperatures. Your “Heat Setpoint temperature” tells your heating system the room temperature to maintain during cold weather. The “Cool Setpoint Temperature” tells your cooling system the room temperature to maintain during hot weather.

Factory Program: Your thermostat comes from the factory preprogrammed with all seven days of the week set to the times and temperatures shown in Table 15.

Table 15: Factory Set-Up of Time & Temperature Settings

Time Period	Start Time	Heat Setpoint Temperature	Cool Setpoint Temperature
Wake	6:00 am	70° F (21.0° C)	78° F (25.5° C)
Day	8:00 am	62° F (16.5° C)	85° F (29.5° C)
Evening	6:00 pm	70° F (21.0° C)	78° F (25.5° C)
Sleep	10:00 pm	62° F (16.5° C)	72° F (22.0° C)

If the factory program meets your needs, simply follow the “Setting the Clock & Day” instructions and you’re done.
If you want to change the preprogrammed times and/or temperatures, follow the instructions under “Custom Program”.

Custom Program

Begin by planning your program. Use the “Custom Program Worksheet” to plan your program time periods and temperatures you want during each period. You must program four periods for each day. Fill in the complete table, as it will serve as a record of your programs, then follow this procedure:

1. Press PROGRAM once.
2. Press ▲ or ▼ to scroll until “SET” is blinking. To select, press PROGRAM once.
3. Press ▲ or ▼ to scroll to the day or group of days you want to program. To select your preference, press PROGRAM once.

   Day / Group of Days options are:

   - To program each day individually, the abbreviations are: “M” is Monday, “TU” is Tuesday, “W” is Wednesday, “TH” is Thursday, “F” is Friday, “SA” is Saturday, and “SU” is Sunday.
   - “MTUWTHFSASU” allows you to give all 7 days of the week the identical heating & cooling program.
   - “MTUWTHF” allows you to give all 5 weekdays the identical heating & cooling program.
   - “SASU” allows you to give both weekend days the identical heating & cooling program.
   - “DFLT” restores all seven days of the week to the original factory preprogrammed ENERGY STAR program.
4. Press ▲ or ▼ to scroll through the four time periods. To select your preference, press PROGRAM once.
5. Press ▲ or ▼ to scroll to the desired starting hour. To select, press PROGRAM once.
6. Press ▲ or ▼ to scroll to the desired starting minute. To select, press PROGRAM once.
7. Press ▲ or ▼ to scroll to the desired HEAT setpoint temperature. To select, press PROGRAM once.
8. Press ▲ or ▼ to scroll to the desired COOL setpoint temperature. To select, press PROGRAM once.

Time & Temperature Programming Example

In this example, the thermostat user wants to program the weekend with a different schedule from the Factory Program. The user wants the Saturday and Sunday program to be identical.

1. Press PROGRAM once.
2. Press ▲ or ▼ to scroll until “SET” is blinking. To select, press PROGRAM once.
3. Press ▲ or ▼ to scroll until “SASU” is blinking. To select, press PROGRAM once.
4. Press ▲ or ▼ to scroll until “WAKE” is blinking. To select, press PROGRAM once.
5. Press ▲ or ▼ .to scroll hours to “8:”. To select, press PROGRAM once.
6. Press ▲ or ▼ to scroll minutes to “:30”. To select, press PROGRAM once.
7. User wants to keep same HEAT setpoint temperature. To keep unchanged, press PROGRAM once.
8. User wants to keep same COOL setpoint temperature. To keep unchanged, press PROGRAM once.

Now you’re done setting up the Wake period, and ready to set up the other three time periods for Saturday and Sunday:

- Program the Day period for SASU by repeating steps 1 through 8, but in Step 4, select “DAY”.
- Program the Evening period for SASU by repeating steps 1 through 8, but in Step 4, select “EVE”.
- Program the Sleep period for SASU by repeating steps 1 through 8, but in Step 4, select “SLEEP”.

Now you’re done setting up all four time periods for SASU.

Overriding the Program

Your thermostat's HOLD feature allows you to put the thermostat in manual operation for either a specified or indefinite length of time. HOLD will override your programmed settings, but does not lose them.

Setting up a Temporary Hold

You may set up a temporary hold by hours and/or days.

1. Press PROGRAM once.
2. Press ▲ or ▼ to scroll until "HOLD" is blinking. To select, press PROGRAM once.
3. Press ▲ or ▼ to scroll through options. "DAYS" allows you to specify 0-99 days hold; "HRS" allows you to specify 0-24 hours hold. To select your preference, press PROGRAM once.
4. Press ▲ or ▼ to scroll to the desired length of time. To select, press PROGRAM once.

The thermostat is now on hold for the time period you selected, unless you decide to turn it OFF earlier. (See Turning OFF a Hold.)

Setting up a Permanent Hold

1. Press PROGRAM once.
2. Press ▲ or ▼ to scroll until "HOLD" is blinking. To select, press PROGRAM once.
3. Press ▲ or ▼ to scroll to "ON". To select, press PROGRAM once.

The thermostat is now on hold until you manually turn OFF the hold. (See Turning OFF a Hold.)

Turning OFF a Hold

1. Press PROGRAM once.
2. Press ▲ or ▼ to scroll until "HOLD" is blinking. To select, press PROGRAM once.
3. Press ▲ or ▼ to scroll to "OFF". To select, press PROGRAM once.

The thermostat will now resume your programmed time and temperature settings.

For an easy planning refer to the Custom Program Worksheet (Annex I, page 16).

System Check-out

To verify thermostat operation after mounting and wiring it, perform the following:

1. Energize the system.
2. Set fan to ON. Select each fan speed (TA180 Models) to verify operation.
3. Set the System button to AUTO, or available selection.
4. Using the UP arrow, adjust temperature more than 5°F above the room temperature to cycle on heating.
5. Using the DOWN arrow adjust the temperature to 5°F below room temperature to cycle on cooling.

NOTE: If the thermostat is set to utilize a time-based purge cycle (Service menu 16), the thermostat will conduct a 3-min purge on initial start-up if a pipe sensor is connected.

Condensate Overflow Interrupt

The remote probe input can be used with a condensate overflow interrupt switch (CO), either in conjunction with a remote probe (normally closed CO switch) or with local sensing (normally open CO switch). When the condensate switch activates, the T180 will display the service wrench and disable all outputs.

Figure 7: Remote Probe Installation

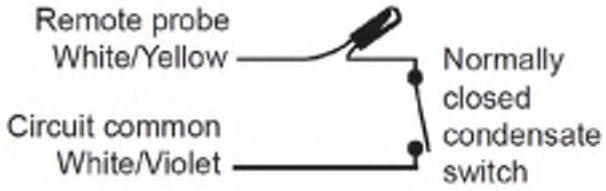

Figure 8: Local sensor installation

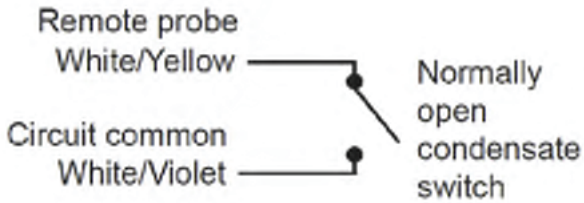

Fan Operation

The thermostat may be factory configured for standard or staged fan operation.

Standard Fan Operation

Single setpoint represented in Figure 9. Programming mode includes multiple setpoints.

Figure 9: Standard Fan Operation

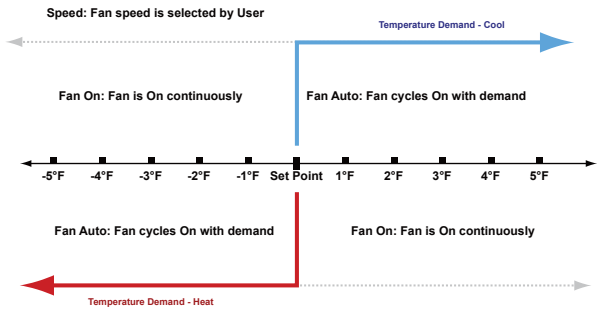

Table 16: Standard Fan Operation Overview

Menu	Description
FAN ON	Fan is on continuously and is not dependant on a heat or cool demand
FAN AUTO	Fan cycles on with a heat or cool temperature demand and cycles off with the heat or cool output
FAN SPEED	High, medium, or low is selected by the user

Staged Fan Operation with Temperature Demand

Single setpoint represented in Figure 10. Programming mode includes multiple setpoints.

Figure 10: Staged Fan Operation

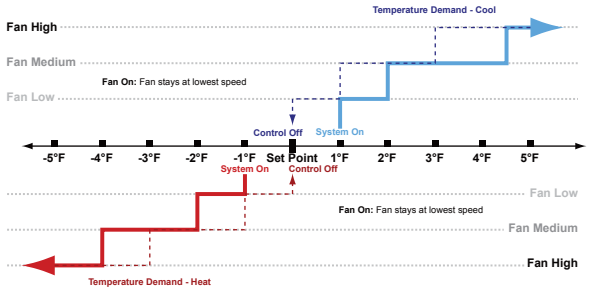

Table 17: Staged Fan Operation with Temperature Demand Overview

Menu	Description
FAN ON	Fan stages from high to medium to low and stays continuously on in the lowest available speed
FAN AUTO	Fan stages from high to medium to low and cycles off at set point
FAN SPEED	selected by the thermostat program

Fancoil Operation

Fancoil operation is either a 2-pipe or 4-pipe configuration which is determined by jumper selection JP4 (see Installing, Mounting and Wiring the Thermostat, page 4).

Pipe Sensor Operation

A pipe sensor can be connected when the thermostat is configured for either 2-pipe or 4-pipe fan coil operation (see JP4 jumper configuration). The Pipe sensor is used to determine the water temperature in the Main Coil. The Pipe Sensor should be mounted on the Main Coil supply and wrapped with insulating material.

Pipe Sensor Input: 10K Remote Probe or a standard On-Off Aqua-stat can be used for summer/winter changeover. ON (closed) is winter heating mode and OFF (open) is summer cooling mode.

Purge Cycle Operation

With a pipe sensor connected, this thermostat will initiate a purge cycle if the sensed water temperature is ambiguous (not adequately hot or cold). The purge cycle algorithm can be either temperature or time based, depending on the configuration of Service Menu 16.

Temperature-Based Purge

- When an Ambiguous mode is detected and a demand exists, a 3 minute purge timer begins and the Main Output is opened.
- After the 3 minute purge cycle, the thermostat checks again to see if the water temperature is more than 15°F from set point, or above 80°F or below 60°F.
- If Winter or Summer mode is determined, normal HVAC operation occurs. If still ambiguous, the thermostat checks to see if the COIL temperature is below 60°F or above 80°.
  - Coil < 60°F = Summer Mode.
  - Coil > 80°F = Winter mode.
- Purge Cycle is repeated until a non-ambiguous condition is sensed.

NOTE: If at any time the demand goes away, the thermostat will abort the purge cycle.

Time-Based Purge (Default)

1. The time-based purge cycle will start a 3-min purge cycle and enable the Main Output if any of the following conditions occur: transition from OFF to AUTO mode, Reset event, power cycle, and/or 1-hour timer expires.
2. After the 3 min purge cycle, a pipe sensor reading says: Pipe is 15°F+ below the zone temp = Summer mode Pipe is 15°F+ above the zone temp = Winter mode Pipe is within 15°F of zone temp = still Ambiguous
3. If a Winter or Summer mode is determined, the appropriate heating/cooling occurs. The thermostat will purge and check pipe temperatures again after 1-hour.
   - If step 2 is still ambiguous, all thermostat outputs are disabled for 1 hour.
   - After 1 hour, the purge cycle resumes at step 1.

HVAC Setback Systems

Setback Operation - Remove JP3

This is a low level input that is normally open. When switch is closed, the T180 heating and cooling setback limits are used as temperature control points. Fan operation in setback is cycled with demand. Pressing any button will override setback for 1 hour. Setback will override any user setting unless control is turned to OFF.

Intelligent Occupancy Sensors like the SD200-001 and SD200-002 can be used with this input to set the HVAC system to control at setback limits.

Door Switch Only Operation - Install JP3

A stand alone door or window switch can be connected to the T180 to disable the HVAC system (outputs) if a door or window is left open for more than 2 minutes. A one-time ten minute override can be initiated by pressing any thermostat key pad.

The T180 thermostat can be used with optional S200 series occupancy detection equipment. Purchasing and installing this equipment to compliment the thermostat adds energy savings by setting back HVAC operation during occupied and unoccupied times.

Occupancy Operation (Install JP3)

The T180 can be used with PECO S200 series occupancy detection equipment. The occupancy and switch inputs are designed to connect to the SB200 slave sensor and SE200 door switch.

The Occupancy Sensor is a low-level switch that is open when there is occupancy and closed when unoccupied.

The Door Switch is a low-level switch that is open when the door is open and closed when the door is closed. This system requires both an Occupancy Sensor and a Door Switch.

Operation from an Occupied Mode

The T180 operates normally and looks for a door close. A door close signal initiates occupancy status detection.

If occupancy is detected, the T180 will maintain normal HVAC control. It then waits for a door open signal before determining occupancy again.

If no occupancy signal is detected within 2 minutes, the T180 changes to unoccupied mode and controls at setback temperature values.

Operation from an Unoccupied Mode

In an Unoccupied State, the T180 sets heating and cooling set points to setback values, as determined in the service menu. In this mode, the fan is automatically set to cycle with demand.

The T180 will continually monitor the room for occupancy.

Any occupancy detection, including door open, will set the operation to occupied mode.

In either mode, if the door is left open for more than 2 minutes the T180 will disable the HVAC system. A one-time ten minutes override can be initiated by pressing any thermostat keypad.

Optional detection equipment configurations and operation are described below.

SB200-001 Occupancy Sensor

The SB200-001 occupancy sensor (Figure 11) serves as an occupancy sensor for automatic control of a guest room HVAC system. It incorporates an innovative dual delay processor which allows the sensor to verify the nature of occupancies, and is capable of eliminating unnecessary actuations of the HVAC device due to unintentional passages or short time occupancies. The sensor may also serve as a slave sensor (Figure 12, page 15).

The sensor switch is open in occupied mode and closed in unoccupied mode. An optional door and/or window switch (Figure 11) is open when the door/window is open and is closed when the door/window is closed.

NOTE: To use this configuration, a jumper must be installed to JP3 to allow occupancy input.

An optional door and/or window switch (Figure 11) can be added for use with the SB200-001 sensor.

Operation

In an occupied mode, the thermostat operates normally and looks for a door open signal. When the door opens, the thermostat waits for a door close signal. If the door is open for more than two minutes, the thermostat turns the HVAC system outputs to OFF. During this two minute period, if any button is pressed on the keypad, the time delay is extended to ten minutes. The time delay can only be extended once. Once the HVAC outputs transition to OFF, a door closure is required to re-enable the outputs. When the door closes, the thermostat starts a two minute timer and tries to detect occupancy. If the timer expires and no occupancy is detected, the thermostat transitions to an unoccupied state. If occupancy is detected while the timer is running, the thermostat will remain in the occupied mode.

In an unoccupied mode, the thermostat sets heating and cooling set points to setback values as determined by factory or user settings. The fan is automatically set to cycle with demand. The thermostat continually monitors the occupancy sensor and will enter into occupied mode if occupancy is detected.

If the installation is only using a door/window switch, the thermostat will disable the HVAC outputs if this output is open for longer than two minutes.

To enable door/window switch only operation, install a jumper to JP3 (see Installing, Mounting and Wiring the Thermostat, page 4) and the occupancy input must be shorted to circuit common.

Figure 11: Optional Equipment Configuration #1

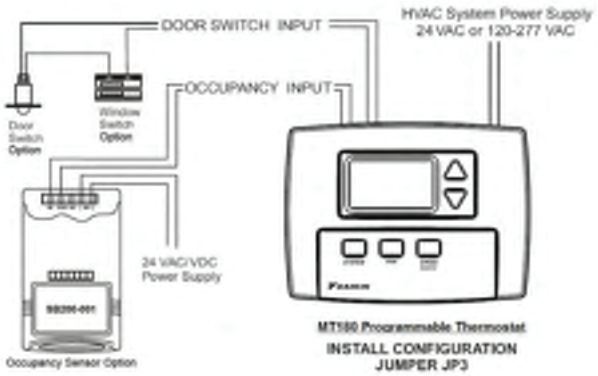

SD200-001 Occupancy Sensor

The SD200-001 occupancy sensor (Figure 12) serves as a master sensor for a guest room HVAC management system. The sensor provides HVAC operation according to occupancy status, as well as door/window switch monitoring, selectable high/low temperature setback, form-C output, slave sensor connectivity, and a five minute door open HVAC shut-off.

NOTE: To use this configuration, the jumper to JP3 is removed to allow setback input.

An optional door and/or window switch (Figure 12) and slave sensor can be added for use with the SD200-001 sensor.

Operation

In an occupied mode, the SD200-001 occupancy sensor (Figure 12) and door switch use advanced microprocessor logic to determine occupancy. A door open signal will initiate occupancy status detection. If the sensor determines that a room is occupied, it will allow normal HVAC control. The sensor will wait for another door open signal before determining occupancy again.

In an unoccupied mode, the sensor continually monitors the room. Any occupancy detection will set the operation to occupied mode.

Figure 12: Optional Equipment Configuration #2

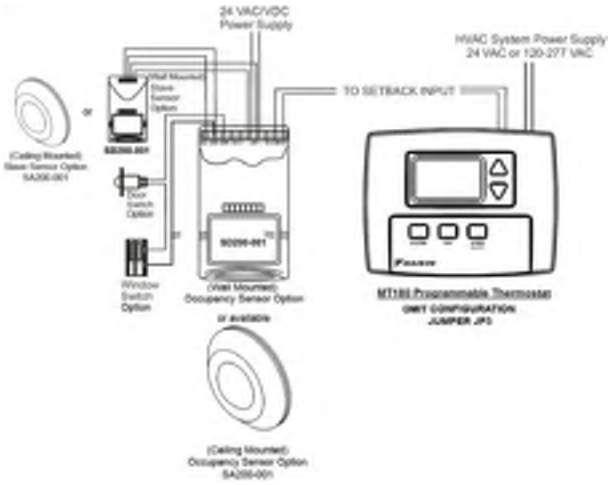

SD200-002 Occupancy Sensor

The SD200-002 occupancy sensor serves as a stand alone master sensor for a guest room HVAC management system.

The sensor provides HVAC operation according to occupancy status, as well as selectable high/low temperature setback, form-C output, and a five minute door open HVAC shut-off.

This system provides basic room setback and is ideal for control of HVAC in commercial spaces.

NOTE: To use this configuration, the jumper to JP3 is removed to allow setback input.

Operation

With each occupancy detection, an OFF delay is started and can be set to delay for up to 30 minutes (Figure 13).

Figure 13: Optional Equipment Configuration #3

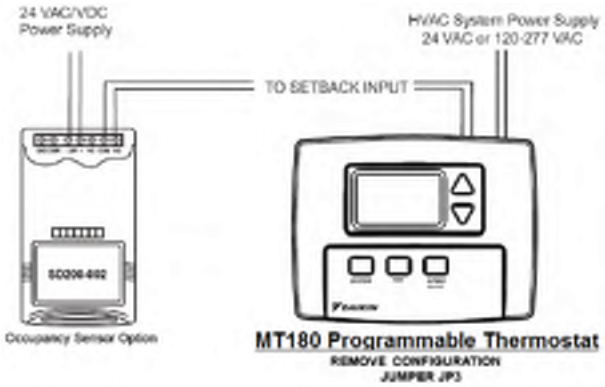

Table 18: Custom Program Worksheet

Day	Time Period	Start Time	Heat Setpoint Temperature	Cool Setpoint Temperature
Monday	Wake			
	Day			
	Evening			
	Sleep			
Tuesday	Wake			
	Day			
	Evening			
	Sleep			
Wednesday	Wake			
	Day			
	Evening			
	Sleep			
Thursday	Wake			
	Day			
	Evening			
	Sleep			
Friday	Wake			
	Day			
	Evening			
	Sleep			
Saturday	Wake			
	Day			
	Evening			
	Sleep			
Sunday	Wake			
	Day			
	Evening			
	Sleep			

Table 19: Service Menu Table

Menu	Feature	Range	Description/Comments
1	F° or C°	0-Celsius 1-Fahrenheit (Default)	Determines temperature displays in Fahrenheit or Celsius
3	Fan OFF Delay	0–99 Seconds (0-Default)	The amount of time (in seconds) the lowest available fan speed will run after the thermostat outputs are disabled.
4	Range Low	50–90°F, 10–32°C (50°F- Default)	The lowest selectable temperature setpoint value.
5	Range High	50–90°F, 10–32°C (90°F- Default)	The highest selectable temperature setpoint value.
6	Setback Low	0-OFF 50–82°F, 11–27°C (55°F- Default)	The temperature setpoint value you want the thermostat to Heat to when the T180 is in the Setback mode.
7	Setback High	0-OFF 50–90°F, 11–32°C (90°F- Default)	The temperature setpoint value you want the thermostat to Cool to when the T180 is in the Setback mode.
8	Zone Temp Offset	+/- 9°F or +/- 4.5°C (0°F-Default)	Zone Temperature offset adjusts the sensed Zone Temperature displayed, allowing calibration in the field.
9	Keypad Lockout	0-No keypad lockout (Default) 1-Disables System/Fan/Program 2-Disables all buttons	This function blocks access to certain features of the device. The Service Menu is still available if the keypad lockout is enabled.
10	Fan Mode	1-ON 2-Auto 3-ON or Auto (Default)	ON-Fan is always on, regardless of demand. Auto-Fan is only ON with heating or cooling demand. ON or Auto-User can choose either selection.
11	Fan Speeds	1-High 2-Low, High 3-Low, Med, High (Default)	Speeds which are selectable by the user.
12	System Mode	OFF, Auto OFF, Heat, Cool, Auto (Default) OFF, Heat, Cool Heat, Cool, Auto	Sets the system modes the occupant is able to select.
13	Controlled OFF or OFF Override	0-Disable (Default) 1-Enable	When enabled, the unit will control to the Setback setpoints. This function will also override the user mode setting of OFF if the room temperature is equal to or above the Cool Setback setpoint or equal to or below the Heat Setback setpoint.
14	Front Panel Setback Control	0-Disable (Default) 1-Enable	When enabled, Setback is shown as an available system mode selection. If Setback mode is selected, the thermostat will control to the current Setback Heat and Setback Cool setpoints.
15	Cycled Outside Air Damper	0-Cycles (Default) 1-Continuous	The Outside Air output will cycle with heat or cool demand if Cycles mode is chosen. The Outside Air output is active anytime the thermostat is out of the OFF mode when Continuous mode is chosen. When in Setback the Outside Air output will turn OFF.
16	Temperature Based Purge Cycle	0-Time Based (Default) 1-Temperature Based	Determines if the Purge Cycle will be Temperature or Time Based.
17	Minimum Dead Band Adjustment	3°F (Default) 3–10°F, 1.5–5°C	A changeover deadband value prevents short cycling between Heating and Cooling modes. The value is adjustable to meet various HVAC system requirements.
18	Factory Default Reset	0-Disable (Default) 1-Enable	Toggles between OFF and DFLT. When factory default is desired, select DFLT.
25	Pre-Occupancy Purge	0 Hours (Default) 0–3 Hours	Energizes Fan Low for selected number of hours (0-3) prior to events Wake (Occupied 1) and Day (Occupied 2)
30	Cycles Per Hour (CPH) Cooling	3 CPH (Default) 0–6 CPH	Defines the number of cycles per hour for cooling. A selection of 0 disables cycling.
32	Cycles Per Hour (CPH) Heating	5 CPH (Default) 0–12 CPH	Defines the number of cycles per hour for heating. A selection of 0 disables cycling.
35	Heat Recovery Rate	5°F/Hr (Default) 0–18°F/Hr 0–10°C/Hr	Defines the rate in which the device achieves the comfort setpoint. 0 disables ramp recovery.
36	Cool Recovery Rate	5°F/Hr (Default) 0–18°F/Hr 0–10°C/Hr	Defines the rate in which the device achieves the comfort setpoint. 0 disables ramp recovery.
40	Minimum OFF Time	4 Minutes (Default) 1–10 Minutes	Sets the minimum OFF time for both heat and cool output
45	Intermittent Fan	0-Disable (Default) 1-Enable	If enable is selected, the intermittent fan will operate during setback operation. (Default values will be used unless menu 46 and 47 are adjusted.)
46	Intermittent Fan-ON Time	5 Minutes (Default) 1–60 Minutes	Defines the duration in which fan low will be ON. Fan ON will be activated after Fan OFF time has passed.
47	Intermittent Fan-OFF Time	25 Minutes (Default) 0–60 Minutes	Defines the duration in which fan low will be OFF. Fan OFF will be activated after Fan ON time has passed. A selection of 0 will result in continuous Fan.
71	Revision	—	Upon menu selection, the firmware and configuration revision will be displayed.
80	System Test Main Output (Cool)	0-Disable (Default) 1-Enable	If enable is selected, it will activate the main output (cool output) for 10 minutes. Fan High will automatically turn ON. If a different menu is selected the output will be disabled.
81	System Test Main Output (Heat)	0-Disable (Default) 1-Enable	If enable is selected, it will activate the secondary output (heat output) for 10 minutes. Fan High will automatically turn ON. If a different menu is selected the output will be disabled.
82	System Test Fan Output	0-Disable (Default) 1-Enable Fan Low Output 2-Enable Fan Medium Output 3-Enable Fan High Output	If enable is selected, it will activate the fan output for 10 minutes. If a different menu or a different fan speed is selected the output will be disabled.

People and ideas you can trust.™

Daikin Applied Training and Development

Now that you have made an investment in modern, efficient Daikin equipment, its care should be a high priority. For training information on all Daikin HVAC products, please visit us at www.DaikinApplied.com and click on Training, or call 540-248-9646 and ask for the Training Department.

Warranty

All Daikin equipment is sold pursuant to its standard terms and conditions of sale, including Limited Product Warranty. Consult your local Daikin Applied representative for warranty details. To find your local Daikin Applied representative, go to www.DaikinApplied.com.

Aftermarket Services

To find your local parts office, visit www.DaikinApplied.com or call 800-37PARTS (800-377-2787). To find your local service office, visit www.DaikinApplied.com or call 800-432-1342.

This document contains the most current product information as of this printing. For the most up-to-date product information, please go to www.DaikinApplied.com.

Products manufactured in an ISO Certified Facility.

IM 1019 (10/11)

©2011 Daikin Applied | (800) 432–1342 | www.DaikinApplied.com

Installation and Maintenance Manual IM 1171-7

Group: **WSHP/FCU**
Part Number: **910166919**
Date: **April 2015**

Digitally Adjustable Display Sensor

Used with:

Water Source Heat Pumps (WSHP) - Sensor Part No. 910121754
- SmartSource™ Units - Models GS & GT
- Enfinity™ Units with MicroTech® III Controls - Models CCH, CCW; VFC, VFW; LVC, LVW; MHC, MHW & VHC, VHF

Fan Coil Units (FCU) - Sensor Part No. 910113679, 910152148
- Models With MicroTech III Controls - 910113575

Contents

Overview 2
Sensor buttons & dimensions. 2
Applications 3
Sensor functions. 3
Mounting, Maintenance, Terminations 4
Mounting. 4
Maintenance. 4
Terminations 4
Initial Start-up, Display Descriptions 6
Terminal descriptions 6
Initial start-up occupied sequence 6
Power fail start-up occupied sequence 6
Display descriptions 6
Adjusting the setpoint 6
Front Panel Button Operation 7
Occupied icon indicator 7
“OVERRIDE” on the display 7
Fan status & speed indicators 7
System mode “HEAT/COOL/AUTO/OFF/DHUM” indicators . . . 7
“ALARM” on the display 7
“E-SAVE” word on the display 7
“SETPOINT” word on the display 7
“STATUS” word & dot on the display 7
Front panel button operation 7
Optional Technician Adjustments. 9
Optional technician adjustments 9
Diagnostics 11
Specifications 12

The display sensor is used in conjunction with the MicroTech III equipped units as described in the Application Section below. The same sensor is used for Water Source Heat Pump (WSHP) and for Fan Coil Units (FCU) with just a hardware jumper and menu change during configuration. The sensor has a digital display for Temperature, Humidity, Occupancy, Fan Speed, System Mode, Alarm, Setpoint and Status indication. Controls include six buttons for Setpoint, System Mode, Fan Speed, Occupied/Unoccupied Request, and Override Reset. (Figure 1).

Sensor buttons & dimensions

Figure 1: Digital display sensor - Water Source Heat Pump P/N 910121754, Fan Coil P/N 910113679, 910113575, 910152148

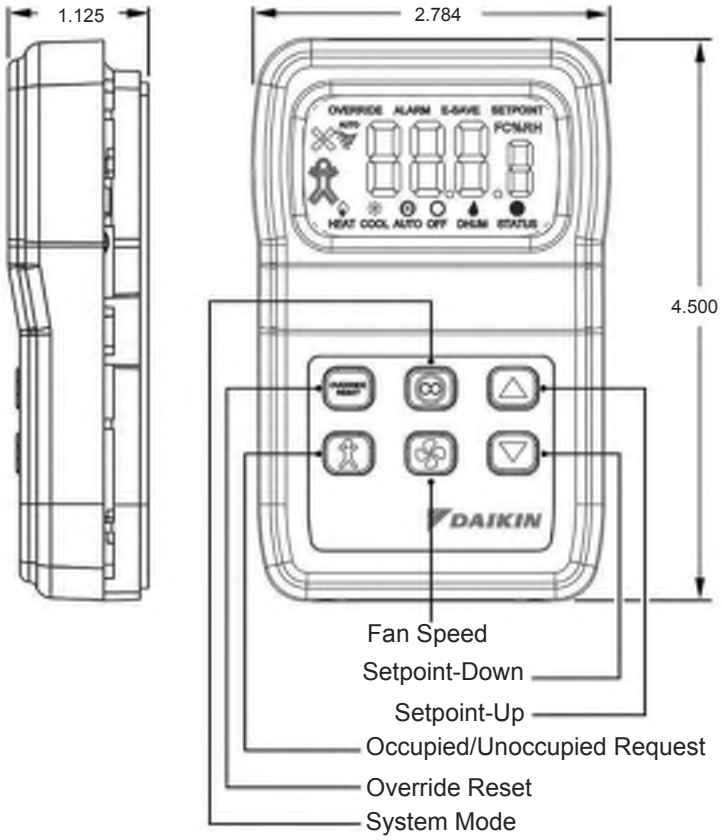

The display sensor can be used on the products shown in Table 1.

Table 1: Product usage guide

Units	Product		Models	Controls	Used with Digitally Adjustable Sensor with Temperature and Humidity Display
Water Source Heat Pumps	Horizontal	Enfinity™	W.CCH, CCW	MicroTech III Unit Controller	Yes
	Vertical		W.VFC, VFW		
	Vertical Stacked		W.VHC		
	Console		W.MHC, MHW		
	Horizontal & Vertical	SmartSource 1-Stage	W.GSH, GSV	MicroTech III SmartSource Unit Controller	
		SmartSource 2-Stage	W. GTH, GTV		
	Vertical	SmartSource Inverter	W.DFW	Daikin Inverter Controller	No
Fan Coils	Horizontal	ThinLine™	FC.H, FH.H	MicroTech III Unit Controller	Yes
	Vertical		FC.V, FH.V		

The display sensor for water source heat pump applications is shown in Table 2.

Table 2: Water source heat pump application guide

Units	Product		Models	Applications										
				Cooling	Heating	Dehumidification					Electric Heat			Water-side Economizer
				Stages		Smart Dehumidification	Hot Gas Reheat	Simplified	Humidistat Controlled	Dehumidification Only	Boilerless	Supplemental	Primary	3-Way Valve Control
Water Source Heat Pumps	Horizontal	Enfinity	W.CCH, W.CCW	1	1	No	No	No	No	No	No	No	No	No
	Vertical		W.VFC, W.VFW	1	1	No	Yes	No	No	No	Yes[1]	Yes[1]	No	No
	Vertical Stacked		W.VHC	1	1	No	No	No	No	No	No	No	No	No
	Console		W.MHC, W.MHW	1	1	No	No	No	No	No	Yes[1]	Yes[1]	No	No
	Horizontal & Vertical	Smart-Source 1-Stage	W.GSH, W.GSV	3	4	Yes	Yes	Yes	Yes	Yes	Yes	Yes	Yes	Yes
	Horizontal & Vertical	Smart-Source 2-Stage	W.GTH, W.GTV	3	4	Yes	Yes	Yes	Yes	Yes	Yes	Yes	Yes	Yes
	Vertical	Smart-Source Inverter	W.DFW	NA	NA	No	No	No	No	No	No	No	No	No

Note: *[1]With optional Boilerless controls*

Sensor functions

910152148, 910113575, 910113679, Fan-coil unit model:

- Display sensor to show room Temperature, fan speed (AUTO/HIGH/MEDIUM/LOW), system mode (HEAT/COOL/AUTO/OFF), ALARM, Override and occupancy.

Note: *910113575 will not display a temperature value as this is measured using a unit-mounted return air sensor.*

910121754, Water source heat pump model:

- Display sensor to show room Temperature, room humidity, fan speed (AUTO/ON), system mode (HEAT/COOL/AUTO/OFF/DHUM), ALARM, Override and occupancy.
- De-humidification output contact has an adjustable setpoint and configurable deadband. This output operates automatically using the RH setpoint and deadband in the system “AUTO” mode or in the “DHUM” mode.

Mounting

Location

Avoid mounting on outside walls or in direct sunlight.

Junction Box, (J-Box)

1. Pull the wire through the wall and out of the junction box, leaving about six inches free.
2. Pull the wire through the hole in the base plate.
3. Secure the back plate to the box using the #6-32 × 1/2 inch mounting screws provided.
4. Screw the plate firmly to the wall so the foam plate backing is compressed about 50%.
5. Terminate the unit according to the guidelines in the Termination section.
6. Attach Cover by latching it to the top of the base, rotating it down and snapping into place.
7. Secure the cover by backing out the lock-down screws using a 1/16" Allen wrench until it is flush with the bottom of the cover.

Figure 2: Junction box mounting (hardware is provided for both junction box and drywall installation.)

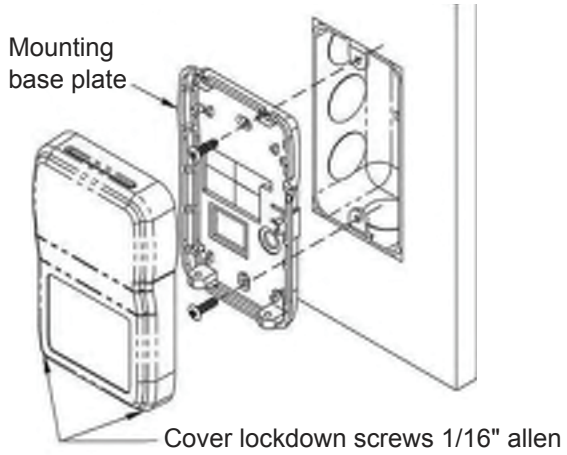

Drywall mounting

1. Place the base plate against the wall where you want to mount the sensor.
2. Mark out the two mounting holes where the unit will be attached to the wall. Drill a 3/16" hole in the center of each mounting hole and insert a drywall anchor into the holes.
3. Drill one 1/2" hole in the middle of the marked wiring through hole area.
4. Pull the wire through the wall and out the 1/2" hole, leaving about six inches free.
5. Pull the wire through the hole in the base plate.
6. Secure the base to the drywall anchors using the #6 × 1" mounting screws provided.
7. Screw the plate firmly to the wall so the foam plate backing is compressed about 50%.
8. Terminate the unit according to the guidelines in the Termination section.
9. Attach cover by latching it to the top of the base, rotating it down and snapping it into place.
10. Secure the cover by backing out the lock-down screws using a 1/16" Allen wrench until it is flush with the sides of the cover

Note: *in any wall-mount application, the wall temperature and the temperature of the air within the wall cavity can cause erroneous readings.*

The mixing of room air and air from within the wall cavity can lead to condensation, erroneous readings and sensor failure. To prevent these conditions, Daikin recommends sealing the conduit leading to the junction box with fiberglass.

Maintenance

Wipe the display as needed with a damp water only cotton cloth. Do not use any type of cleaner as it may damage the buttons or scratch the display. Do not paint.

Terminations

Daikin recommends using a twisted shielded pair of at least 22AWG for the power wire connections. The shield should be earth grounded only at the power source. Larger gauge wire may be required for long runs.

Figure 3: Sensor Circuit Board

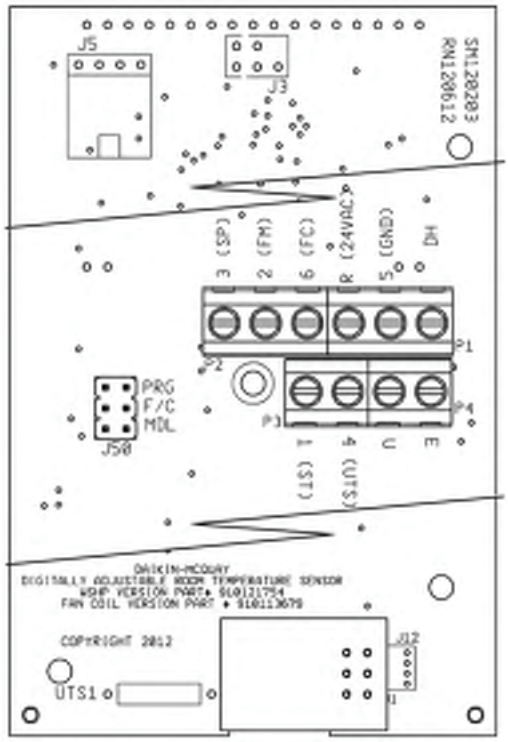

DAIKIN

TERMINATIONS

⚠ CAUTION

Combination of power wiring (R, 5, DH) and analog (1, 2, 3, 4, and 6 to ground) wiring in a common cable may cause signal interference and must be avoided.

All wiring must comply with the National Electric Code (NEC) and local codes. Do NOT run any of this device's wiring in the same conduit as other AC power wiring. Tests show that fluctuating and inaccurate signal levels are possible when AC power wiring is present in the same conduit as the signal lines. If you are experiencing any of these difficulties, please contact your Daikin representative.

Figure 4: SmartSource MicroTech III board to digital room temperature sensor wiring

SmartSource Board	MicroTech III Board								I/O Expansion Module
	Base Board								
Terminal Block Label	TB2-1	TB1-1	TB1-2	TB1-3	TB1-4	TB1-5	TB3-1	TB3-2	TB1-1
Description	24VAC	Unit Status Output	Fan & Unit Mode	Setpoint Adjust	Room Temp Sensor & Tenant Override	DC Signal Common	Emergency Shutdown Input	Unoccupied Input	Dehumidification Input
Terminal Label	R	1	2	3	4	5	E	U	1
Typical Wiring									
Terminal Label	R (24VAC)	1 (ST)	2 (FM)	3 (SP)	4 (UTS)	5 (GND)	6 (FC)	E	U	DH
Description	24VAC	Unit Status Output	Fan & Unit Mode	Setpoint Adjust	Room Temp Sensor & Tenant Override	DC Signal Common	Fan Speed Select - Fan Coil Version Only	Emergency Shutdown	Unoccupied	Dehumidification
Sensor	Digitally Adjustable Room Temperature Sensor (Part No. 910121754)									

Figure 5: Fan-Coil MicroTech III board to digital room temperature sensor wiring

SmartSource Board	MicroTech III Board							
	Base Board							
Terminal Block Label	TB2-2	TB1-5	TB1-4	TB1-3	TB1-2	TB1-1	TB1-6	TB2-1
Description	24VAC	Unit Status Output	Unit Mode	Fan Mode	Setpoint Adjust	Room Temp Sensor & Tenant Override	DC Signal Common	Unoccupied
Terminal Label	24 VAC	BO9	AI7	AI4	AI3	AI1	COM	BI2
Typical Wiring								
Terminal Label	R (24VAC)	1 (ST)	2 (FM)	6 (FC)	3 (SP)	4 (UTS)	5 (GND)	U
Description	24VAC	Unit Status Output	Fan & Unit Mode	Fan Speed Select - Fan Coil Version Only	Setpoint Adjust	Room Temp Sensor & Tenant Override	DC Signal Common	Unoccupied
Sensor	Digitally Adjustable Room Temperature Sensor (Part No. 910113679) / 910152148, 910113575							

Terminal descriptions

Note: *Refer to "Figure 3: Sensor Circuit Board" on page 4 for terminal locations*

R.....15 to 28VAC* (AC requires separate shielded wire) (Shield terminated at power source only)

DH .....Dehumidification Contact (Triac from R to DH @170mA, WSHP Only).

U .....Unoccupied Contact. (Terminal grounded when in Unoccupied, VDC only).

E .....System "Off" Indication. (Terminal grounded when in System "Off" mode, VDC only).

1.....Status Indicator Input from the MicoTech III Unit Controller. (5VDC).

2.....Output Signal, and Fan Mode System (0 to 5VDC). Output Signal, System Mode Select for FCU only, (0 to 5VDC).

3.....Output Signal, Setpoint Adjust from 55º to 95˚F (default) or ±5º Configurable. (0 to 5VDC) See Setpoint Analog Range Tolerances. See Table 3.

4.....Output Signal, Room Temp Thermistor Sensor. (10K ATP Z curve, 10K-2). 910113575 tenant override only

5.....Ground or Neutral* (AC requires separate shielded wire). Common Reference for All Signal Terminals.

6.....Output Signal, Fan Speed Select for FCU only. (0 to 5VDC). Terminal 6 not used for WSHP units.

Note: ** The AC power wiring at terminals [R] & [5] should be run in a separate twisted shielded pair to avoid possible fluctuating and inaccurate signal levels induced into the other sensor signal wires.*

This sensor AC power can be run in the same conduit with the sensor signal wire as long as it's run in twisted, shielded pair and terminated properly.

Setpoint analog range tolerance

Table 3: Setpoint analog range tolerance

Setpoint Analog Tolerance			
55˚ to 95˚F Scale	**-3˚ to +3˚F Scale**	**-5˚ to +5˚F Scale**	**Terminal 3 Analog Output**
@ 55˚F (min.)	@-3˚F (min.)	@ -5˚F (min.)	0.0 to 0.10 vdc
@65˚F	@-1.5˚F	@-2.5˚F	1.3 to 1.42 vdc
@75˚F	@0˚F	@0˚F	2.12 to 2.2 vdc
@85˚F	@+1.5˚F	@+2.5˚F	2.58 to 2.63 vdc
@95˚F (max.)	@+3˚F (max.)	@+5˚F (max.)	3.0 to 4.0 vdc

Initial start-up occupied sequence

On initial installation power-up, the sensor is in "Occupied" mode with a solid occupied icon and DC voltage at terminal "U". If the "STATUS/Dot" input on Terminal 1 from the controller indicates occupied ("ON" continuous), then the unit continues to stay "Occupied". If the "STATUS/Dot" input on Terminal 1 from the controller indicates unoccupied (5 seconds "ON" then 5.5 seconds "OFF"), then the occupied icon will flash the desired occupancy state every 8 seconds, indicating to the user a mismatch of the desired occupied status and system occupied status at the controller

Power fail start-up occupied sequence

On a power failure, the sensor retains its last known desired occupancy status in non-volatile memory. On restoration of power, the sensor restores its last known desired occupancy state from memory. The occupied icon will reflect this with a solid (occupied) or hollow (unoccupied) indication and terminal "U" will have voltage applied (occupied) or grounded (unoccupied). If the "STATUS/Dot" input on Terminal 1 from the controller matches this occupancy state then the occupied status icon will continue to be solid or hollow depending on the last known state. If the "STATUS/Dot" input on Terminal 1 from the controller is different from the sensor occupied state, then the occupied icon will flash the desired occupancy state every 8 seconds indicating to the user a mismatch of the desired occupied status and system occupied status at the controller.

Display descriptions

Numerical display

The factory setting default numerical display (Figure 6) shows current temperature (°F or °C) and toggles to humidity and setpoint display every 5 seconds.

Figure 6: Sensor numerical display

Adjusting the setpoint

(Temperature or humidity)

Whichever is displayed at the time, temperature or humidity:

- Push the ▲ or ▼ button, the displayed setpoint can be adjusted up or down.
- After an adjustment, the setpoint is displayed for 5 seconds.

During the setpoint display push (System Mode Button) to switch between the temperature display or the humidity display.

- Push the ▲ or ▼ button, the displayed setpoint can be adjusted up or down. (See "Front Panel Button Operation" on page 7 for details.)

The unit can also be programmed in the field to "Setpoint Only" display or Setpoint Lockout. See the "Optional Technician Adjustments" on page 9.

Occupied icon indicator

The Occupied Icon on the left side of the display indicates whether the room sensor is in the Occupied or Unoccupied Mode, (Figure 7).

Figure 7: Occupied & unoccupied icons

= "Occupied" = "Unoccupied"

Solid is Occupied and Hollow is Unoccupied.

- A blinking icon every 8 seconds indicates an override request that has not been fulfilled.

"OVERRIDE" on the display

The **"OVERRIDE"** word indicator in the top left corner illuminates when the sensor is signalled by the "Status" input (Terminal 1).

This is initiated from the Override/Reset Button at first and then confirmed from the "Status" input code which keeps the "OVERRIDE" indicator on.

Fan status & speed indicators

"Fan & No Wavy Lines" indicate the fan is Off.

"Fan & 2 Wavy Lines" indicate Low.

"Fan & 3 Wavy Lines" indicate Medium.

"Fan & 4 Wavy Lines" indicate High, **and the word "AUTO"** indicate fan Auto mode.

System mode "HEAT/COOL/AUTO/OFF/DHUM" indicators

The **"HEAT/COOL/AUTO/OFF/DHUM"** Mode Indicators on the bottom of the display describe each of the sensor's modes. The mode is changed by pushing the System Mode button on the sensor. (Dhum is only used on WSHP units.)

"ALARM" on the display

The **"ALARM"** word indicator on top illuminates when the sensor interprets the "Status" input code from the controller as an alarm. See Table 4 on page 7.

"E-SAVE" word on the display

The **"E-SAVE"** word indicator on top illuminates when the sensor interprets the "Status" input code from the controller as Standby Mode (See Table 4 on page 7).

"SETPOINT" word on the display

The **"Setpoint"** word on top illuminates when the sensor is displaying the setpoint on the numerical display (Temperature or Humidity). When this "Setpoint" indicator is off, the numerical display shows the actual room temperature or humidity.

"STATUS" word & dot on the display

The Status "Dot" on the display indicates the unit status or alarm condition. It is turned "On" and "Off" by interpreting the status input from the controller on terminal 1.

Table 4 shows the alternating conditions and sensor status.

Table 4: WSHP unit status input timing definition

Status Dot "ON" (+ 5 vdc) time	Status Dot "OFF" (0 vdc) Time	WSHP Availability	Display Indication
0.5 seconds	0.5 seconds	Controller Off (or Network "Wink" operation active)	"ALARM" On
0.0 seconds	Continuous	Unit running in Night Setback Override Mode or no power to the unit	"OVERRIDE" On
0.5 seconds	5.5 seconds	Unoccupied Mode	Hollow Occupied Icon
5.5 seconds	0.5 seconds	Standby Mode	"E-SAVE" On
Continuous	0.0 seconds	Occupied Mode	Solid Occupied Icon

Table 5: Fan Coil (FCU) unit status input timing definition

Status Dot "ON" (+ 5 vdc) time	Status Dot "OFF" (0 vdc) Time	Fan Coil Availability	Display Indication
0.3 seconds	0.3 seconds	Alarm Active	"ALARM" On
0.0 seconds	Continuous	Unit running in Night Setback Override Mode or no power to the unit	"OVERRIDE" On
0.5 seconds	5.5 seconds	Unoccupied Mode	Hollow Occupied Icon
5.5 seconds	0.5 seconds	Standby Mode	"E-SAVE" On
Continuous	0.0 seconds	Occupied Mode	Solid Occupied Icon
3.0 seconds	3.0 seconds	Calibration Mode/ Network Wink	No Change

Front panel button operation

System mode indication (FCU only)

"HEAT/COOL/AUTO/OFF"

The "HEAT/COOL/AUTO/OFF" Mode Indicators on the bottom of the display show the mode status of the sensor and are changed by pushing the System Mode button.

- **"HEAT"** on the display means the unit will only provide heating.
- **"COOL"** on the display means the unit will only provide cooling.
- **"AUTO"** on the display means the unit switches automatically to provide cooling or heating.
- **"Off"** on the display means the unit will not provide cooling, heating or fan operation.

There should always be one indicator “ON” unless the sensor has no power or has a problem. The System Mode Analog Output voltage on Term. 2 will change based on the system mode.

Fan speed indication (FCU only)

“AUTO/HIGH/MEDIUM/LOW”

The Fan Speed Indicators on the display show the fan speed status (AUTO/HIGH/MEDIUM/LOW) and are changed by pushing the Fan Mode button.

“Fan & 4 Wavy Lines & AUTO” - the fan stages up or down automatically depending on the demand for HEAT/COOL.

“Fan & 4 Wavy Lines” - the fan runs continuously at high speed regardless of the system mode setting of HEAT/COOL/AUTO.

“Fan & 3 Wavy Lines” - the fan runs continuously at medium speed regardless of the system mode setting of HEAT/COOL/AUTO.

“Fan & 2 Wavy Lines” - the fan runs continuously at low speed regardless of the system mode setting of HEAT/COOL/AUTO.

“Fan & No Wavy Lines” - Indicates the fan is Off.

There should always be one indicator “On” unless the sensor has no power or has a problem. The Fan Speed Analog Output voltage on Terminal 6 will change based on the fan speed selection.

System mode indication (WSHP only)

“HEAT/COOL/AUTO/OFF/DHUM”

The “HEAT/COOL/AUTO/OFF/DHUM” Mode Indicators on the display show the mode status of the sensor and are changed by pushing the System Mode button.

- **“HEAT”** on the display means the unit will only provide heating.
- **“COOL”** on the display means unit will only provide cooling.
- **“AUTO”** on the display means the unit can switch automatically to provide cooling or heating or dehumidification.
- **“OFF”** on the display means the unit will not provide cooling, heating, dehumidification or fan operation (“E” terminal goes Low).
- **“DHUM”** on the display means that only dehumidification will operate.

There should always be one indicator “On” unless the sensor has no power or has a problem. The System Mode Analog Output voltage on Terminal 2 will change based on the system mode selection.

Fan indication (WSHP only)

“AUTO/ON”

The Fan Indicators on the left side of the display show the fan status (AUTO/ON) of the sensor and are changed by pushing the Fan Mode button.

“Fan & 4 Wavy Lines & AUTO” - the fan runs on a call for HEAT/COOL/DHUM. Otherwise the fan is off.

“Fan & 4 Wavy Lines” - the fan runs continuously regardless of the system mode setting of HEAT/COOL/AUTO/DHUM.

“Fan & No Wavy Lines” - the fan is Off when the system mode is “Off”.

Override/Reset button (timed override & alarm reset)

When the “Override/Reset” Button is pressed, the thermistor sensor is shorted. If held for more than 3 seconds but less than 11 seconds, it puts the controller into a timed Occupied Override (the time is set by the controller). If the unit is in alarm, then holding the “Override/Reset” Button for more than 11 seconds will clear all alarms in the controller but only if the cause of the alarm has already returned to its non-alarm condition. Some alarms will not reset from the digital room sensor.

In this case, power to the unit must be cycled off for 5 seconds to clear the alarm. Continuously resetting alarms from the room sensor could damage the controller. Please call a service technician when repeated alarm resets are required to keep the unit operational.

Occupied button (occupied/ unoccupied request)

Note: *Terminal “U” opens HI to source power on power-up “Occcupied”*

When the “Occupancy” Button is pushed, the current “Occupied” or “Unoccupied” status of the sensor will be toggled to the opposite condition for 20 seconds. Both the display and “U” terminal output reflect the new status during the 20 seconds. If a confirmation signal is received from the controller into the Status Input terminal “1” within 20 seconds, then the new occupancy condition remains; otherwise the “U” terminal will return to the original state and the “Occupied” Icon will flash the desired occupancy state every 8 seconds.

Up & down setpoint buttons temp or humidity)

Press the Setpoint “Up/Down” Buttons once to enter the Setpoint Adjustment Mode. View the display to see whether the unit is in Temperature or Humidity Setpoint mode. If needed, press the “System Mode” Button once to toggle to the desired Setpoint. The current setpoint value will display for 5 seconds. When the “Up/Down” Buttons are pressed in this mode, the temperature or humidity setpoint will change in one degree or percent (%) increments. It will only change within the temperature setpoint range that was ordered (or the setpoint range that was set via the Program Mode).

The humidity setpoint is always between 40% to 90%. After 5 seconds of no buttons being pushed, the sensor will go into the standard display mode.

System mode button (FCU has HEAT/COOL/AUTO/OFF) or (WSHP has HEAT/COOL/AUTO/OFF/DHUM)

When the “System” Button is pushed, the unit switches between system modes.

Fan mode button (FCU has AUTO/HIGH/MEDIUM/LOW/OFF) (WSHP has AUTO/ON)

When the “Fan” Button is pushed, the fan speed changes in order from one speed to another.

Optional technician adjustments

Note: *The sensor setup is factory set per your order. Setup adjustments are not required*

The unit is shipped ready to install per the order and does not require any special setup or programming. The following Program Menu Changes are available if the installer decides to change the factory settings. The Setpoint Up/Down Buttons and Occupancy Button are used in the Programming Mode to make Menu changes and selection.

Set-up jumper (J50) configuration

(Factory set per order)

⚠ CAUTION

Turn off power to the unit before reconfiguring the F/C or MDL jumper settings.Damage to the sensor board can occur if jumpers are moved while there is power to the unit and sensor.

Figure 8: J50 Jumper

Label description setting

PRG	Program Mode or Run Mode Menu below).	Program Mode = Jumper installed for Program Mode (See Program Run Mode = Jumper removed for Run Mode (Place jumper on one pin only).
F/C	ºC Indication or ºF Indication	ºC = Jumper installed for ºC . ºF = Jumper removed for ºF Indication (Place jumper on one pin only). 910152148, 910113575
MDL	Sets the Model FCU or WSHP	910113679 = Jumper removed for FCU (Default for units ordered as FCU). 910121754 = Jumper installed for WSHP (Default for units ordered as WSHP).

Program mode menu pages:

(Display required)

Note: *Both J50 “F/C” and J50 “MDL” jumpers must be configured first before entering the program “PRG” mode.*

Entering program mode and making changes

1. Install the J50 “PRG” jumper onto both pins with power turned on to enter Program Mode.
2. Press the Up/Down Buttons to advance to the desired program parameter from P1 through P14 (Parameters described below).
3. Press the Occupancy Button to select the specific program parameter to change.
4. Change the parameter value as described in the Mode Menus section below. (Usually with the Up/Down Button)
5. Press the Occupancy Button again to set the selected parameter.
6. Press the Up/Down Buttons to proceed to the next parameter (as in Step 2 above).
7. When done making changes, remove the J50 “PRG” jumper (and place over one pin). This action will end the Programming Mode and store all the values. The sensor is now in the Run Mode.

Program mode menu pages

P1 **Setpoint Mode** (Factory set to temperature value “S1”. J50 ºF/ºC must be set before entering the program “PRG” mode).

- **S1** – “UP/DOWN” to select setpoint to absolute temperature setpoint value. Actual setpoint value set in P4 and P5. **Example:** 55ºF (13º C) to 95ºF (35º C).
- **S2** – “UP/DOWN” to select setpoint to relative temperature setpoint value of ±5.0ºF (±2.8ºC).
- **S3** – “UP/DOWN” to select setpoint to relative temperature setpoint value of ±3.0ºF (±1.67ºC) for Enfinity systems.

P2 **Temperature Offset** (Factory set to zero).

- “UP” to increase offset up to +2.
- “DOWN” to decrease offset down to -2.

P3 **Humidity Offset** (Factory set to zero).

- “UP” to increase offset up to +5
- “DOWN” to decrease offset down to -5.

P4 **Setpoint Low Range** (Factory set to 55°F or 13°C depending on J50 °F/°C setting).

P1 in S1 Mode: Adjustment range 55 to 65°F or 13 to 18°C.

- “UP” to increase the low setpoint range up to 65°F or 18°C.
- “DOWN” to decrease the low setpoint range down to 55°F or 13°C.

P1 in S2 Mode: No adjustment. Factory set to -5°F (-2.8°C).

P1 in S3 Mode: No adjustment. Factory set to -3°F (-1.6°C) for Enfinity systems.

P5 **Setpoint High Range** (Factory set to 95°F or 35°C depending on J50-°F/°C setting).

P1 in S1 Mode: Adjustment range 85 to 95°F or 29 to 35°C.

- "UP" to increase the high setpoint range up to 95°F or 35°C.
- "DOWN" to decrease the high setpoint range down to 85°F or 29°C.

P1 in S2 Mode: No adjustment. Factory set to 5°F (2.8°C).

P1 in S3 Mode: No adjustment. Factory set to 3°F (1.6°C) for Enfinity systems.

P6 **Fan Lock Mode** (Factory set to Unlocked "Unl")

- "UP/DOWN" to set Fan Lock mode. Choose from list below:

All Models	**Unl**	Enables fan to be controlled by the Sensor Fan button
All Models	**FA**	Locks fan to the Fan Auto position (No Sensor Fan button control)
WSHP Models	**FO**	Locks fan to the Fan On position (No Sensor Fan button control)
FCU Models	**FH**	Locks fan to the Fan High speed position (No Sensor Fan button control)
FCU Models	**Fd**	Locks fan to the Fan Medium speed position (No Sensor Fan button control)
FCU Models	**FL**	Locks fan to the Fan Low speed position (No Sensor Fan button control)
FCU Models	**Fo**	Locks fan to the Fan Off position (No Sensor Fan button control)

P7 **System Lock Mode** (Factory set to Unlocked "Unl")

- "UP/DOWN" to set System Lock mode. Choose from list below:

Unl	Enables System to be controlled by the Sensor System Mode button.
UH	Locks System to the Heat mode (No Sensor System button control).
UC	Locks System to the Cool mode (No Sensor System button control).
UA	Locks System to the Auto mode (No Sensor System button control).
UO	Locks System to the Off mode (No Sensor System button control).
Ud	Locks System to the Dhum mode (No Sensor System button control).

P8 **Display Resolution** (Factory set to ±0.5 resolution, "0.5").

0.1 "UP/DOWN" to set resolution to ±0.1, (Rounds up at .05).

0.5 "UP/DOWN" to set resolution to ±0.5, (Rounds up at .08).

1 "UP/DOWN" to set resolution to ±1.0, (Rounds up at .5).

P9 **Dehumidification Dead band (DB)** (Factory set to 2%), (WSHP Only).

2 "UP/DOWN" to set Dead band at 2% (On at setpoint SP, Off at SP-DB).

3 "UP/DOWN" to set Dead band at 3% (On at setpoint SP, Off at SP-DB).

4 "UP/DOWN" to set Dead band at 4% (On at setpoint SP, Off at SP-DB).

5 "UP/DOWN" to set Dead band at 5% (On at setpoint SP, Off at SP-DB).

P10 **Display Mode** (Factory set to #16 for WSHP units, factory set to #4 or #3 for FCU Units).

- "UP/DOWN" to set display mode.
- Choose from numbered list below. Choices 5-16 will not be shown if P12 = nOH.

1 = No value on the main display (Blank).

2 = Temperature Value (TV).

3 = Temperature Setpoint (TSP) (FCU Default 910113575).

4 = Temperature Value & Temperature Setpoint (FCU Default 910152148, 910113679).

5 = Humidity Value (HV).

6 = Temperature Value & Humidity Value.

7 = Humidity Value & Temperature Setpoint.

8 = Temperature Value, Temp Setpoint & Humidity Value.

9 = Humidity Setpoint (HSP).

10 = Temperature Value & Humidity Setpoint.

11 = Temperature Setpoint & Humidity Setpoint.

12 = Temperature Value & Temp Setpoint & Humidity Setpoint.

13 = Humidity Value & Humidity Setpoint.

14 = Temperature Value, & Humidity Value & Humidity Setpoint.

15 = Humidity Value & Temperature Setpoint & Humidity Setpoint.

16 = Temperature Value & Temperature Setpoint & Humidity Value & Humidity Setpoint (WSHP Default).

P11 **Setpoint Button Lockout** (Factory set to "0": Temp. & Humidity Setpoint Enabled.

Note: *1. Selections in P11 will impact Menu P10).*

2. After changing P11 option, remove PRG jumper on J50 to exit programming mode and refresh options. In order to make additional programming changes, PRG Jumper must be reinstalled to enter programming mode.

0 Both Temperature & Humidity Setpoints are enabled (No Setpoint lockout, WSHP Units Only).

1 Humidity Setpoint Only is Enabled (Temperature setpoint is locked out, WSHP Units Only).

2 Temperature Setpoint Only is Enabled (Humidity setpoint is locked out).

3 Both Temperature & Humidity Setpoints are Disabled (Full Setpoint lockout).

P12 Dehumidification Enable/Disable

nOH Dehumidification is Disabled (Factory default for FCU Units).

HuA Dehumidification is Enabled (Factory default for WSHP Units).

P13 Occupancy Button Enable/Disable (Factory set to enabled "ObE").

ObE Occupancy Button Enabled (Factory default)

Obd Occupancy Button Disabled

P14 Firmware Version - XXX.X

P15 For Units with a BACnet or LONWORKS Communications Module

Setpoint Calibration Offset (Factory set to "0".)

- "UP" to increase offset up to +100 will raise the MicroTech III perceived set point from the sensor.
- "DOWN" to decrease offset down to -100. This will lower the MicroTech III perceived set point from the sensor.

Calibrate the displayed set point to the set point value sent to the MicroTech III as follows:

1. Set the digital room sensor displayed set point to 90° F.
2. Observe the local set point via the BAS/EMS connected by the BACnet or LonWorks Communications Module.
3. Adjust the Configuration Menu P15 on the sensor until the local set point and the displayed set point are equal.

P15 For Units without a BACnet or LONWORKS Communications Module

Setpoint Calibration Offset (Factory set to "0".)

- "UP" to increase offset up to +100 will raise the MicroTech III perceived set point from the sensor.
- "DOWN" to decrease offset down to -100. This will lower the MicroTech III perceived set point from the sensor.

The Setpoint Calibration Offset can be calculated using the following formula:

ROUND [(Controller Vdd / Sensor Vdd)*1000]-1000

Example:

Given: Controller Vdd = 5.15VDC

Sensor Vdd = 4.95 VDC

The programmed Calibration Offset would be

[(5.15/4.95)*1000] -1000 = 40

Diagnostics

Problem & possible solution

No display

- Check the power connections and power voltage level
- Replace unit if power is okay.

No temperature signal

- Be sure the termination and wiring is correct and the controller is set up properly. Make sure the "Override/ Reset" button is not stuck down.
- Replace unit if all checks are okay.

Override/Reset not working

- Measure the resistance to ground at the sensor output terminal (Term. 4). When pushing the Override Button, it should show a short. If not, replace the sensor.

No fan voltage signal

- Be sure the termination and wiring is correct and the controller is set up properly.
- Replace unit if all checks are okay.

No system voltage signal

- Be sure the termination and wiring is correct and the controller is set up properly.
- Replace unit if all checks are okay.

De-humidification not working

- Adjust the System Mode to DHUM and check terminal DH for voltage.
- Change the RH setpoint above and below the ambient RH to prove the output contact.
- Replace unit if it still doesn't work.

Occupied not working

- Verify that this terminal is in a powered circuit. Measure the voltage to ground at the occupied terminal (U). When pushing the Occupied Button (<2 secs), it should read close to 0 volts. When you lift the button it should read high volts.
- Replace unit if it still doesn't work.

"Err" shown on the screen

- This indicates that the temperature and humidity sensing element has failed.

FAN key does not change fan mode

- Check to verify FAN is not locked out in Programming Mode Menu Page P6.

MODE key does not change system mode

- Check to verify Mode is not locked out in Programming Mode Menu Page P7.

Up or Down key does not change setpoints

- Check to verify Set points are not locked out in Programming Mode Menu Page P11.

Solid Man goes away after 20 seconds

- Occupancy Request was not acknowledged by Main controller, check wiring of Status Signal from controller.

Supply voltage

AC Hot.....(R) 7 to 28VAC, 24VAC nominal, 0.17VA

GND/Neutral.....(5) Sensor common reference ground.

Sensor

Temperature .....10K-2 Thermistor, ±0.36ºF (±0.2ºC)

Humidity.....2% Accuracy from 20 to 80%, Capacitive.

Outputs

Unoccupied.....(U), Unoccupied = Digital low to ground (Same ground as power source), 100mA @5VDC max.

Dehumidify.....(DH), = Dehumidify = Voltage output (same as supply voltage), 170mA max.

System Off.....(E), System Off = Digital low to ground (Same ground as power source), 100mA @5VDC max.

Fan Speed.....(2 or 6), Analog, 0 to 5 VDC.

System Mode.....(2), Analog, 0 to 5 VDC.

Setpoint .....(3), Analog, 0 to 5 VDC.

Temperature .....(4), Analog thermistor resistance.

Sensor controls

Setpoint .....2 Up/Down buttons

System.....1 button to cycle between Heat/Cool Auto/Off/Dhum/Off

Fan .....1 button to cycle between Auto/High/On.

Occupied .....1 button to check and request change in Occupancy Status.

Override/Reset .....1 button to request timed occupancy override and reset alarms.

Inputs:.....(1), Controller alarm & system status, 5VDC max.

Termination:.....10 Terminals, 16 to 22 AWG.

Mounting:.....Standard 2" × 4" J-Box or Drywall

Field setup jumper J50

PRG ..... Program Mode, On = Program, Off = Run.

F/C.....Display Units, On = ºC, Off = ºF.

MDL.....MODEL, On = WSHP. Off = FCU.

Display

LCD

Overall size.....2.04"W × 1.33"H.

Main Digits.....±999.9 Digits @0.6"H

Resolution.....0.5 displayed value, 0.1 for offset adjust

Main Value.....Temp, Humidity & Setpoint, toggling every 5 sec.

Eng. Units.....ºF, ºC, %RH.

System.....Heat/Cool/Auto/Off/Dhum.

Fan .....Auto/High/Medium/Low.

Occupied Icon .....Hollow = Unoccupied, Solid = Occupied.

Function.....Override, Alarm, E-Save, Setpoint

Field configuration menu

(Requires J50 PRG jumper to be "On")

Offset .....Temp or Humidity display, ±2ºF (±1.0ºC) and ±5% RH.

Setpoint range .....Default 55º to 95ºF (13º to 35ºC), ±3ºF (±1.6ºC) or ±5ºF (±3ºC). Adjustable between 55º to 95ºF, ±3ºF (±1.6ºC) or ±5.0ºF (±2.8ºC).

Fan Lock-in.....Any fan speed or off can be locked in System Lock-in. Any system mode can be locked in

Resolution.....Main display can be default .5, or .1 or 1.0 (ºF, ºC or %).

Display Mode.....Temp only, RH only, Setpoint only or any combination.

Dhum DB ..... Dehumidify Dead Band adjust, 2% default.

Enclosure material

ABS Plastic, UL94V-0.

Ambient

32º to 122ºF (0º to 50ºC), 0 to 95%RH, Non-condensing.

Agency

Restriction of the use of certain Hazardous Substances (RoHS).

©2015 Daikin Applied (04/15) | (800) 432–1342 | www.DaikinApplied.com

DAIKIN

Installation and Maintenance Manual IM 831

Group: **Applied Air Systems**
Part Number: **667757200**
Date: **October 2013**

Fan Coil Thermostat Conversion Kit

to Eliminate 3-speed Switch Capability

Safety Information

The installation of this equipment shall be in accordance the regulations of authorities having jurisdiction and all applicable codes. It is the responsibility of the installer to determine and follow the applicable codes. This equipment is to be installed only by an experienced installation company which employs trained personnel.

WARNING

Rigorously adhere to field wiring procedures regarding proper lockout and tagout of components.

WARNING

To avoid electrical shock, personal injury or death:

1. Installer must be qualified, experienced technician.
2. Disconnect power supply before installation to prevent electrical shock and damage to equipment.

Introduction

This thermostat conversion **kit number 107345245** converts a fan coil unit thermostat to a thermostat without a 3-speed switch. The thermostat kit includes a cover that does NOT have an opening for the 3-speed control switch. The following is the proper procedure to convert the thermostat.

Procedure

CAUTION

If the FAN Switch remains in the left-most (Off) position the thermostat will NOT function properly.

1. Carry out this procedure before mounting the thermostat or applying power to it. If the thermostat is already mounted, turn off all power to it before proceeding.
2. Slide the FAN switch on the front of the thermostat to the setting at which you want the motor to run all the time.
3. Remove the cover from the thermostat by gently prying with behind the left hand edge of the cover with a small screwdriver, then pulling it off as shown in Figures 1 and 2.

NOTE: Once you exchange thermostat covers, the user can no longer change this setting.

4. Adjust the dip switch and jumpers to your desired configuration (see thermostat installation manual).
5. Pull off the fan slide switch cap (Figure 3). Note: Be careful not to change the position of the switch you set in Step 2.
6. Place the new thermostat cover that does not have the 3-speed switch opening on the thermostat (Figure 4).

Figure 1: Opening the Thermostat Cover

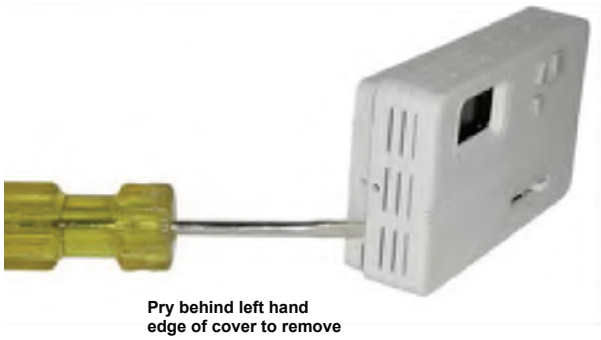

Figure 2: Accessing The Components

Figure 3: Remove Plastic Fan Slide Switch Cap

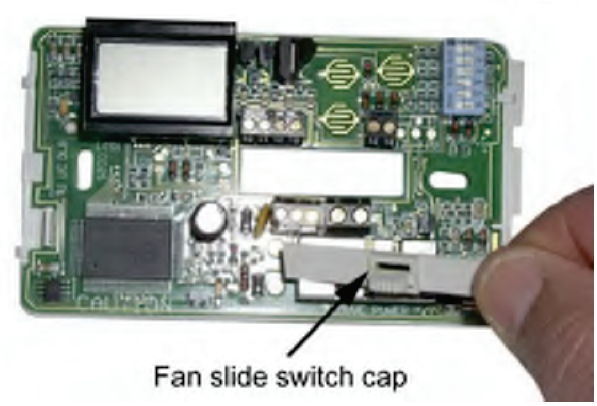

Figure 4: New Thermostat Cover

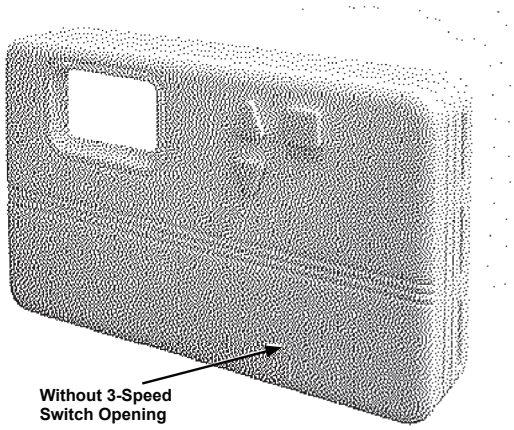

©2013 Daikin Applied | (800) 432–1342 | www.DaikinApplied.com

Installation and Maintenance Manual IM 763

Group: **Applied Air Systems**
Part Number: **106333101**
Date: **October 2013**

Automatic Changeover Switch

for Automatic Seasonal Changeover on Two-pipe Systems

⚠ WARNING

Installation and maintenance are to be performed only by qualified personnel who are familiar with and in compliance with state, local and national codes and regulations, and experienced with this type of equipment.

⚠ CAUTION

Sharp edges and coil surfaces are a potential injury hazards. Avoid contact with them

These line voltage changeover switches are designed to switch a thermostat from heating to cooling based on a change in supply water temperature. The switches can be mounted on 5/8" or 7/8" O.D. copper tube or iron pipe.

Both models are easily mounted to the supply piping with a simple spring clip included with the thermostat.

Models

The 039398600 model (Fig. 1) has 110 in. leads and is the standard changeover switch. The 06361801 model (Fig. 2) has the same operating characteristics and includes 18 in. conduit and connector.

Both models are snap acting, SPDT switches.

Terminal No. 1 has a black wire and is the common (C) connected to valve (valve cycle) or to the yellow wire of the speed switch (fan cycle).

Terminal No. 2 has a red wire and is normally open (N.O.). Connected to the heating (red) wire of the thermostat.

Terminal No. 3 has a blue wire and is normally closed (N.C.). Connected to the cooling (blue) wire of the thermostat.

At approximately 65°F, plus or minus 6°F, terminals 1 and 3 are closed and terminals 1 and 2 are open. At 95°F, plus or minus 6°F, terminals 1 and 2 are closed and terminals 1 and 3 are open.

Figure 1: Automatic Changeover Switch (Kit P/N 039398600)

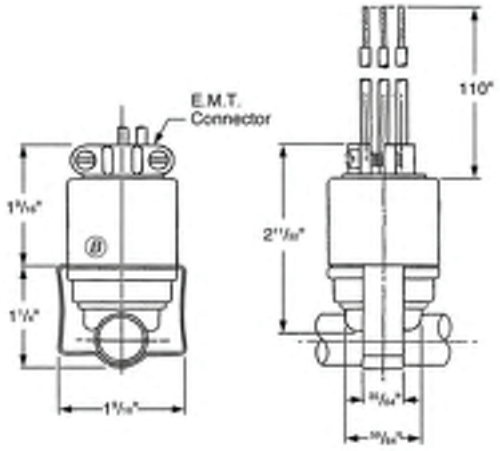

Terminal No. 1 *Black 60455 (Common)*
Terminal No. 2 *Red 60456 (N.O.) – Heating*
Terminal No. 3 *Blue 60457 (N.C.) – Cooling*

Type 14TC33
Open Temp Term. 1 and 3, 95°F ± 6°
Close Temp Term. 1 and 3, 65°F ± 6°

U.L. File – E29653
U.L. Guide – SDFY2
Volts – 120
Amps – 25

DAIKIN

Specifications

Table 26: Electrical Rating

Model	Voltage	FLA	LRA	Restive
039398600 061361801	24 – 240	15 – 5	90 – 30	25
Changeover Range:	65°F to 95°F (18°C to 35°C)			
Maximum Operating Temperature Limits	220°F Fluid Temperature @ 125°F Ambient (104°C Fluid Temperature @ 52°C Ambient)			
Agency Approval	UL Listed, CSA Approved			

The specifications above are nominal and conform to generally acceptable industry standards. Daikin is not responsible for damages resulting from misapplication or misuse of its products.

Figure 2: Automatic Changeover Switch (Kit P/N 061361801)

©2013 Daikin Applied | (800) 432–1342 | www.DaikinApplied.com

DAIKIN

Operation and Maintenance Manual

OM 1111-2

Group: **Applied Air Systems**
Part Number: **OM 1111**
Date: **October 2015**

MicroTech® Unit Controller with I/O Expansion Module for Fan Coils

Models FCHH / FCHC / FCHR and Cabinet Unit Heaters, Models FHHH / FHHC / FHHR

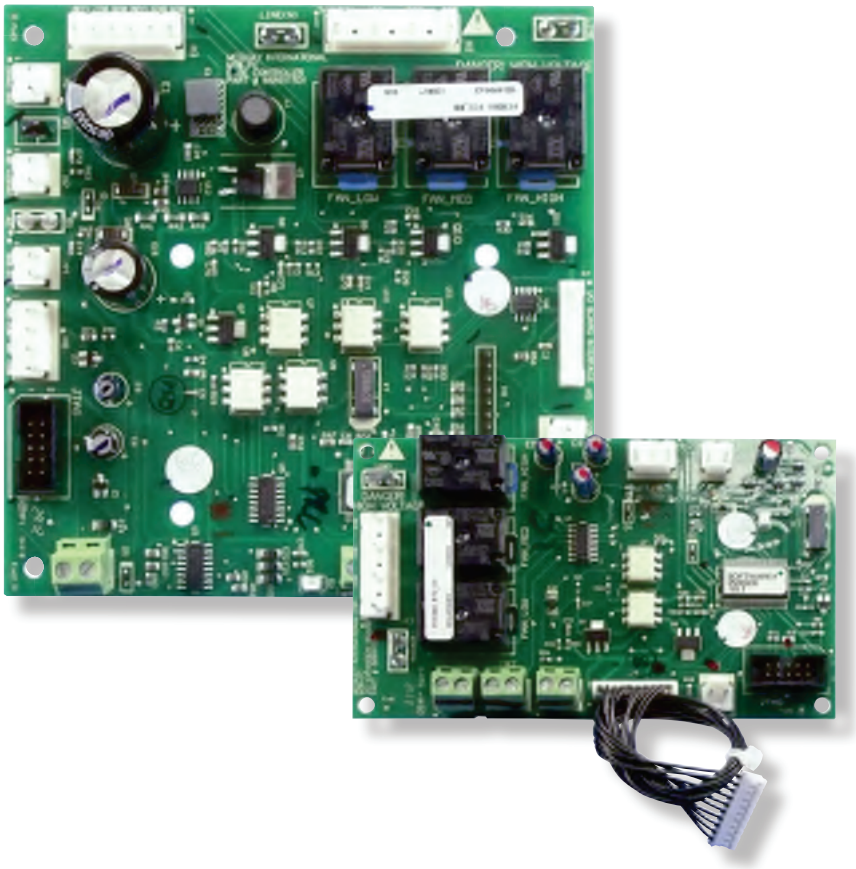

Introduction. 3
General Use and Information 3
MicroTech Baseboard 4
Control Inputs 4
Control Outputs 5
I/O Expansion Module 6
Control Boards Terminals and Connectors Descriptions 8
Fan Coil/Cabinet Unit Heater Unit Control 13
Fan Coil/Cabinet Unit Heater Control Output Tables 13
Operating Modes. 15
Alarms 20
Miscellaneous Control Definitions 21
Appendix A 23
Replacing a MicroTech Circuit Board 23
Appendix B 24
MicroTech Unit Controller with an optional LonWorks® Communication Module 24
Appendix C 25
MicroTech Unit Controller with an optional BACnet Communication Module 25
Appendix D 26
Typical Wiring Diagrams 26

This Operation Manual covers the MicroTech® Unit Controller for the Daikin ThinLine Fan Coils. For information on LonWorks® or BACnet® communication modules and other ancillary components, see:

- IM 1012 — MicroTech III Fan Coil LonWorks Communication Module.
- IM 1013 — MicroTech III Fan Coil Unit Controller BACnet MS/TP Communication Module.
- IM 933 — LonWorks Plug-In Software for use with MicroTech III Unit Controller - LonWorks Communication Module.
- IM 1171 — Digitally Adjustable Display Sensor Installation and Maintenance Manual
- OM 1095 — MicroTech III The Downloading And Configuration Procedure
- ED 15135 — MicroTech III Fan Coil Unit Controller Protocol Information

For information on ThinLine Fan Coils and Cabinet Unit Heaters see

- Catalog 724 — ThinLine Horizontal Fan Coils (Type FCHC, FCHH, and FCHR)
- Catalog 725 — ThinLine Horizontal Cabinet Unit Heaters (Type FHHC, FHHH, and FHHR)
- IM 1152 — Installation Manual Daikin ThinLine Horizontal Fan Coils and Cabinet Unit Heaters (Type FC and FH Horizontal Design).

General Use and Information

The MicroTech unit controller is a fan coil/cabinet unit heater control platform used to control the fan coil/unit heater in all modes of operation, including economizers, control valves, and all components used to control conditioned space temperature. By adding a communication module, (LonWorks or BACnet) network integration is possible. The controller can be used with wall sensor control only.

No outside power sources may be used to operate MicroTech controller. All units must be properly grounded per local code requirements. See the Installation Manual IM 1152 for specific power requirements.

Control Inputs

The baseboard accepts the following analog and binary control inputs:

1. Room Temp and Tenant Override . . . . . Analog
2. Local Setpoint Adjust . . . . . Analog
3. Fan Mode/Speed Switch . . . . . Analog
4. Entering Water Temperature (EWT) . . . . . Analog
5. Discharge Air Temperature (DAT) . . . . . Analog
6. Heat/Cool/Auto Mode Switch . . . . . Analog
7. Freeze Fault Detection. . . . . Binary
8. Occupancy Sensor . . . . . Binary
9. Condensate Overflow . . . . . Binary

Input Description

Room or Return Air Temp & Tenant Override

Analog input may be used to measure Room or Return Air temperature using a 10k NTC thermistor. The same analog input is used to sense the position of the timed override switch when a room sensor is applied. This sensor is mandatory in the Fan Coil/Cabinet Unit Heater units unless the input value is provided through network communications.

Condensate Overflow

Analog input may be used to detect the presence of water in condensate pan. While the input is analog (microOhms), the result of the algorithm is binary (dry or wet). If the value is below 2.5 microOhms, the pan is dry. If the value is above 2.5 microOhms, the pan is wet. Ultimately the pan is considered dry for analog inputs above 1.8 VDC.

Local Setpoint Adjust

Analog input may be used to determine hardwired setpoint position based on a 1.5K Ω potentiometer that is mounted on the room temperature sensor. Setpoint is at its minimum value at 0 Ohms (0.0 VDC), maximum value at 1.5K Ohms (3.0 VDC). Range of input is determined by the setting of an equipment configuration bit. Long range input is limited by Max and Min clamp settings. Either “Short” or “Long” range is selected during the unit order and preset at the Daikin factory. See “nciSoftJumpers” in Table 18 for specification details.

- If “Short Range” is selected, the nvoSetptShift variables are used.
- If “Long Range” is selected, the nvoSetpoint variable is used.

Fan Mode/Speed Switch

Analog input may be used to determine the position of the fan mode and speed switch. Input DC voltages are defined as follows: 0.0v = Auto, 1.0v = High, 2.0v = Medium, 3.0v = Low, 4.0v = Off, 5.0v = Switch is not present.

Entering Water Temperature (EWT)

Analog input may be used to measure temperature of water entering the hydronic coil using a 10k NTC thermistor. The sensor is only required in 2-Pipe Cooling/Heating systems or Heating-only with Supplemental Electric Heat, and is optional elsewhere.

Figure 1: MicroTech Baseboard

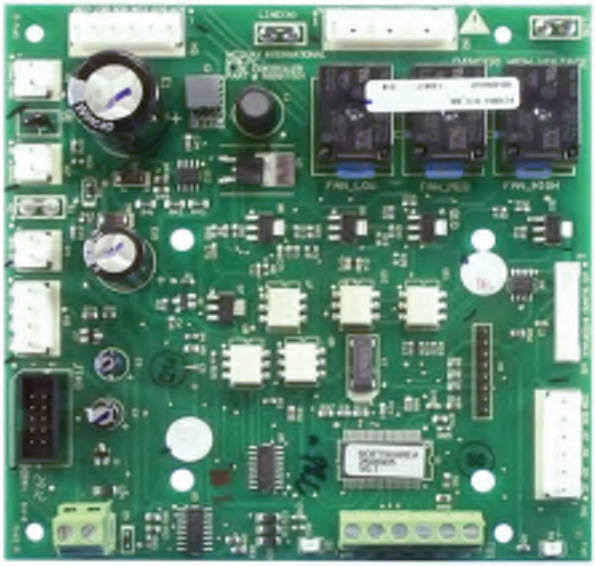

Discharge Air Temperature (DAT)

Analog input may be used to measure discharge air temperature sensor using a 10k NTC thermistor.

Heat/Cool/Auto Mode Switch

Analog input may be used to determine the position of the heat/cool/auto mode switch. Input DC voltages are defined as follows: 0.0v = Cool, 1.0v = Auto, 2.5v = Heat, 5.0v = Switch is not present.

Freeze Fault Detection

Binary input may be used to detect the position of a low discharge air temperature freeze fault detection switch. The sensor part of the switch is installed in the air stream. If the contact on the switch is open, the temperature in the air stream is below freezing (alarm active). If the contact on the

switch is closed, the temperature in the air stream is above freezing (alarm inactive). Must use “nciSoftJumpers” to enable or disable this input. See Table 18. Input span is 0.0 to 3.6 VDC, with a threshold of 1.5 VDC.

NOTE: Freezestat sensor should be provided from the factory or field-supplied

Occupancy Sensor

Binary input may be used to detect the position of an occupancy sensor. This could be a motion detector or a time clock. Open sensor contact represents occupied, closed sensor contact represents unoccupied. Network-effective occupancy has priority over position of this input. Input span is 0.7 (unoccupied) to 5.0 VDC (occupied), with a threshold of 2.85 VDC.

NOTE: Note: Occupancy sensor is field-supplied

Control Outputs

The MicroTech baseboard provides the following Binary Outputs:

1. Fan Low Speed
2. Fan Medium Speed
3. Fan High Speed
4. Valve Output #1
5. Valve Output #2
6. Valve Output #3/Electric Heat S1
7. Valve Output #4
8. Fresh (Outside) Air Damper – 2-Position only.
9. Room Sensor Status Output

Output Description

Each binary output is either a relay with normally-open contacts or a triac. A triac is treated like a relay with normally-open contacts. In other words, energizing the triac is like closing a normally-open contact.

Fan Speed Outputs

There are three fan speed outputs on baseboard, and three fan speed outputs on I/O expansion board. The two separate fans operate in unison. In other words – if the low speed output on baseboard is energized, the low speed output on I/O expansion board is also energized, etc. If all three outputs are de-energized, the fan motor is off. Only a single type (low, medium, high) of speed output shall be turned on when fan operation is required.

- **Low Speed:**
  This binary output is used to operate the fan at low speed. If this output is energized, the fan operates at low speed.
- **Medium Speed:**
  This binary output is used to operate the fan at medium speed. If this output is energized, the fan operates at medium speed.
- **High Speed:**
  This binary output is used to operate the fan at high speed. If this output is energized, the fan operates at high speed.

Two-Position Damper Output

Binary output may be used to open a fresh air ventilation damper. If the output is de-energized, the damper is closed. If the output is energized, the damper is open.

Room Sensor Status Output

Binary output may be used to energize and de-energize an indicator located on the room sensor. See Room Sensor Status Output Annunciation Table below.

Status Annunciation Tables

Table 1: Room Sensor Status Output Annunciation Table

Condition *	Indicator On Time (Sec)	Indicator Off Time (Sec)
Alarm Active: Specific Alarm Determines Number of Flashes (See Alarms section)	0.3	0.3 (1.3 Between Cycles)
Calibration or Network Wink Active	3.0	3.0
Service Test Mode	0.0	Continually
Unoccupied Mode	0.5	5.5
Standby Mode	5.5	0.5
Occupied, Bypass Mode	Continually	0.0

* Annunciation conditions are listed in order of priority.

Table 2: Baseboard Diagnostic LED Annunciation Table

Diagnostic LED State	Condition
LED #1: On Steady	Normal I/O Expansion Board SPI Communications
LED #1: Flashing	Failed I/O Expansion Board SPI Communications
LED #2: On Steady	Normal Comm Module SPI Communications
LED #2: Flashing	Failed Comm Module SPI Communications

The I/O Expansion Module is an extension of the main board and provides extra functionality to the MicroTech control system. The MicroTech unit controller in combination with the I/O Expansion Module will be the standard control system for ThinLine Fan Coils and Cabinet Unit Heaters. See Figure 2.

Adding an I/O Expansion Module (with an interconnect cable) to the main controller allows:

- Economizer Control
- Second Fan Motor Control
- Additional control inputs

I/O Expansion Board Inputs & Outputs

I/O expansion Board accepts the following inputs:

1. Outdoor Air Temperature (OAT) – analog
2. Dirty Air Filter – binary[1]
3. Emergency Shutdown Detection – binary [Future option]
4. Humidistat – binary [Future option]

[1] Currently Dirty Filter indication uses timer only

Input Description

Outdoor(Fresh) Air Temperature (OAT)

Analog input may be used to measure outdoor air temperature using a 10k NTC thermistor.

Dirty Air Filter

Binary input may be used to detect Dirty Filter[2] condition. Dirty air filter alarm is active when the input contact opens. Must use “nciSoftJumpers” to enable or disable this input. See Table 18 for details. Input span is 0.0 to 3.6 VDC, with a threshold of 1.5 VDC.

[2] Currently Dirty Filter input uses timer signal only.

Humidistat [future option]

Binary input may be used to detect humidistat position. Contact closes when dehumidification is required. This feature is only allowed for 4-Pipe Heating & Cooling systems with modulating valves and 2-Pipe Cooling-only systems. Input span is 0.0 to 3.6 VDC, with a threshold of 1.5 VDC.

Figure 2: MicroTech I/O Expansion Module

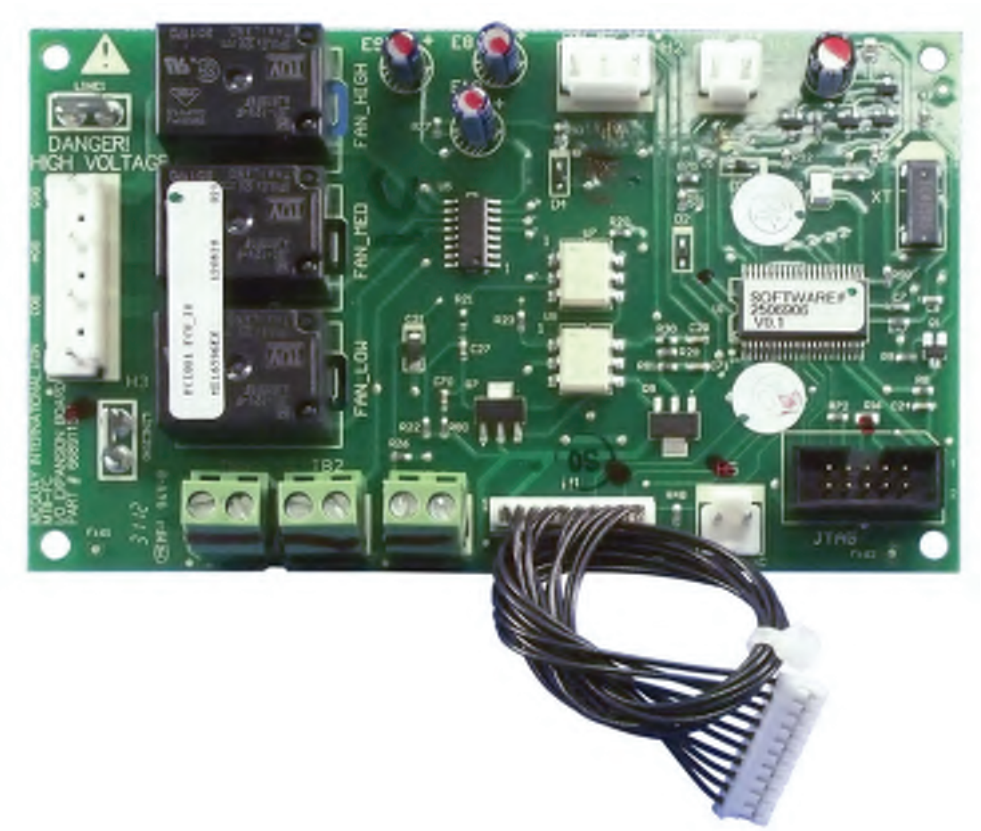

Output Description

I/O Expansion Board provides the following binary Outputs:

1. Economizer Open
2. Economizer Closed
3. Fan Low Speed
4. Fan Medium Speed
5. Fan High Speed

Economizer Control Outputs

I/O expansion board binary outputs 1 and 2 are may be used for economizer control. Output #1 drives the economizer toward the open position. Output #2 drives the economizer toward the closed position.

Emergency Shutdown [future option]

Binary input may be used to detect an emergency shutdown condition. Shutdown occurs when the input contact opens. Must use “nciSoftJumpers” to enable or disable this input. See Table 18 for details. Input span is 0.0 to 3.6 VDC, with a threshold of 1.5 VDC.

Second Fan Motor Speed Outputs

There are three fan speed outputs on baseboard, and three fan speed outputs on I/O expansion board. The two separate fans operate in unison. In other words – if the low speed output on baseboard is energized, the low speed output on I/O expansion board is also energized, etc. If all three outputs are de-energized, the fan motor is off. Only a single type (low, medium, high) of speed output shall be turned on when fan operation is required.

- **Low Speed:**
  This binary output is used to operate the fan at low speed. If this output is energized, the fan operates at low speed.
- **Medium Speed:**
  This binary output is used to operate the fan at medium speed. If this output is energized, the fan operates at medium speed.
- **High Speed:**
  This binary output is used to operate the fan at high speed. If this output is energized, the fan operates at high speed.

Table 3: I/O Expansion Board Diagnostic LED Annunciation Table

Condition *	LED On Time (Sec)	LED Off Time (Sec)
SPI Communications Receive (RX) Fail	0.5	0.5
SPI Communications Transmit (TX) Fail (From Baseboard)	2.5	2.5
Normal SPI Communications	Continually	0.0

* Annunciation conditions are listed in order of priority.

Figure 3: MicroTech Unit Controller & I/O Expansion Module Connectors Descriptions

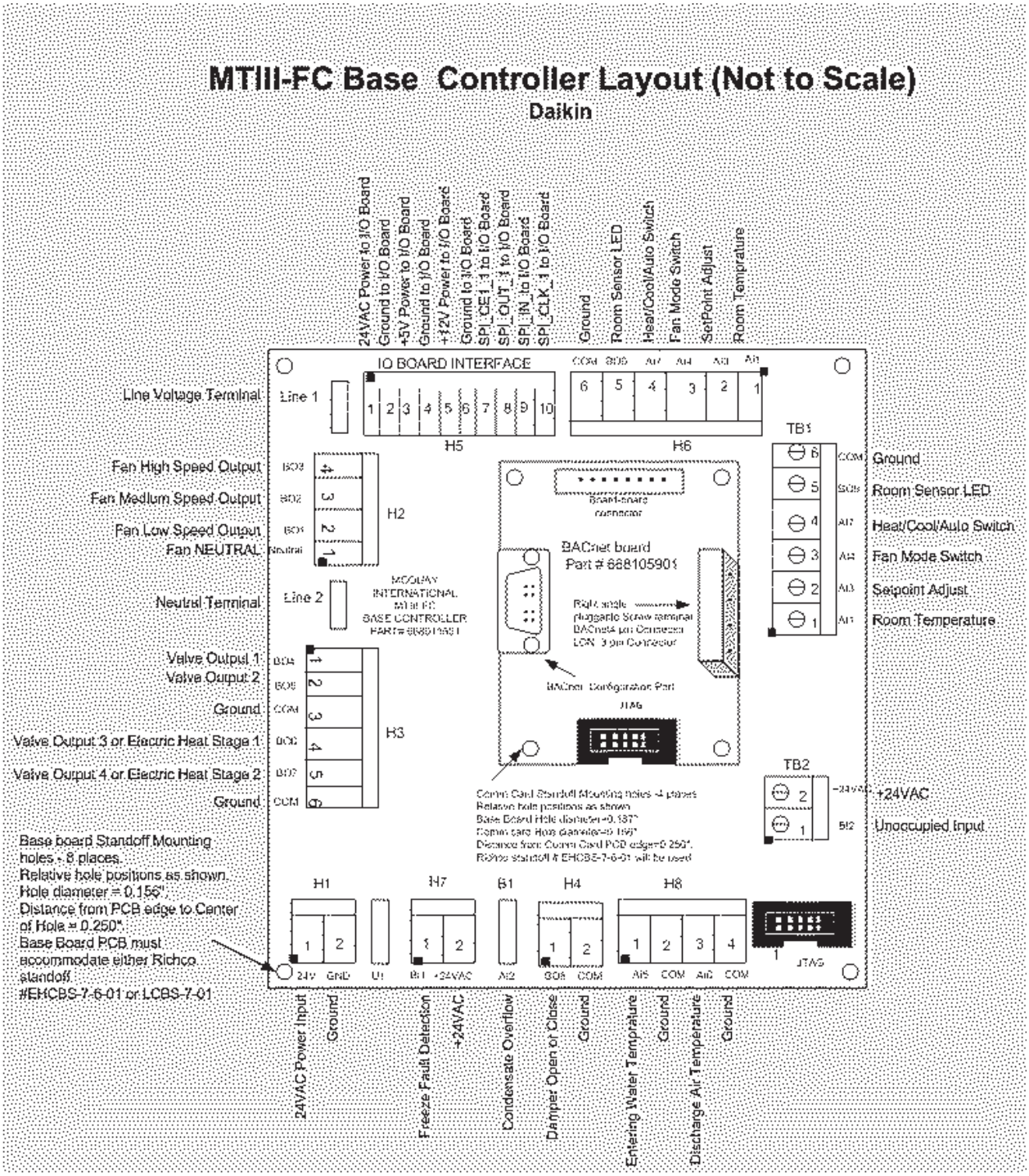

MicroTech Unit Controller

Table 4: MicroTech Unit Controller Terminals & Descriptions

Baseboard Connector – Terminal #	Silk Screen Label	Description
H1-1	24VAC	24VAC Power Input
H1-2	GND	Ground
H2-4	BO3	Fan High Speed Output
H2-3	BO2	Fan Medium Speed Output
H2-2	BO1	Fan Low Speed Output
H2-1	NEUTRAL	Fan Neutral
H3-1	BO4	Valve Output 1
H3-2	BO5	Valve Output 2
H3-3	COM	Ground
H3-4	BO6	Valve Output 3 or Electric Heat Stage 1
H3-5	BO7	Valve Output 4
H3-6	COM	Ground
H4-1	BO8	Damper Open
H4-2	COM	Ground
H5-1	I/O BOARD INTERFACE	24VAC Power to I/O Board
H5-2		Ground to I/O Board
H5-3		+5V Power to I/O Board
H5-4		Ground to I/O Board
H5-5		+12V Power to I/O Board
H5-6		Ground to I/O Board
H5-7		SPI_CE1_1 to I/O Board
H5-8		SPI_OUT_1 to I/O Board
H5-9		SPI_IN_1 to I/O Board
H5-10		SPI_CLK_1 to I/O Board
H6-1	AI1	Room Temperature
H6-2	AI3	SetPoint Adjust
H6-3	AI4	Fan Mode Switch
H6-4	AI7	Heat/Cool/Auto Switch
H6-5	BO9	Room Sensor LED
H6-6	COM	Ground
H7-1	BI1	Freeze Fault Detection
H7-2	24VAC	24VAC
H8-1	AI5	Entering Water Temperature
H8-2	COM	Ground
H8-3	AI6	Discharge Air Temperature
H8-4	COM	Ground
B1	AI2	Condensate Overflow
TB1-1	AI1	Room Temperature
TB1-2	AI3	SetPoint Adjust
TB1-3	A14	Fan Mode Switch
TB1-4	AI7	Heat/Cool/Auto Switch
TB1-5	BO9	Room Sensor LED
TB1-6	COM	Ground
TB2-1	BI2	Unoccupied input
TB2-2	24VAC	24VAC
LINE1	LINE1	Line Voltage/ECM Terminal
LINE2(N)	LINE2(N)	Neutral Terminal

Figure 4: MicroTech III Fan Coil I/O Expansion Board Connector Layout (not to scale)

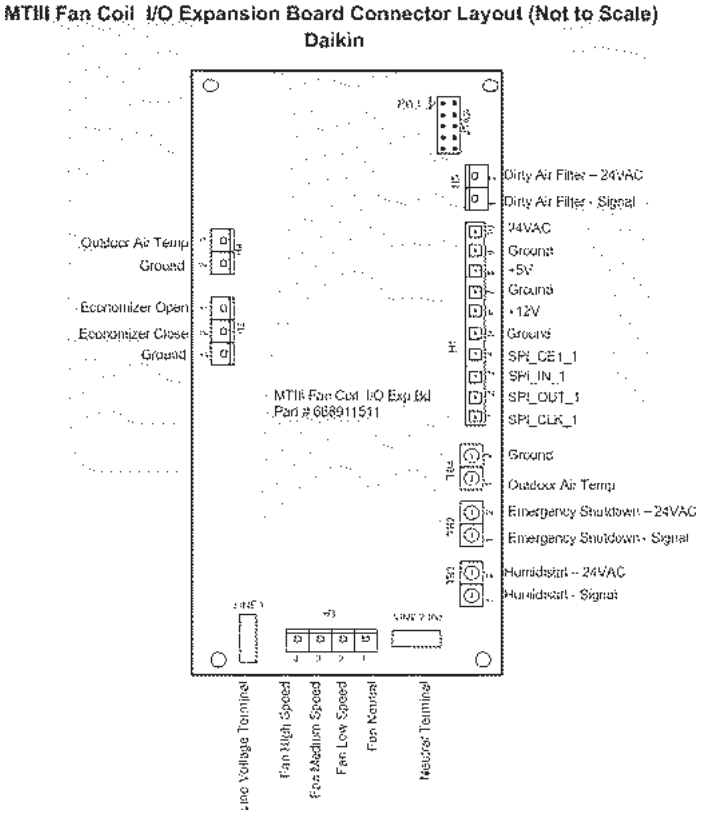

I/O Expansion Module

Table 5: I/O Expansion Module Connectors/Terminals

IO Exp. Module Connector – Terminal #	Silk Screen Label	Description
H1-1	UNIT CONTROLLER INTERFACE	SPI_CLK_1 to I/O Board
H1-2		SPI_OUT_1 to I/O Board
H1-3		SPI_IN_1 to I/O Board
H1-4		SPI_CE1_1 to I/O Board
H1-5		Ground to I/O Board
H1-6		+12V Power to I/O Board
H1-7		Ground to I/O Board
H1-8		+5V Power to I/O Board
H1-9		Ground to I/O Board
H1-10		24VAC Power to I/O Board
H2-1	BO1	Economizer Open output
H2-2	BO2	Economizer Closed output
H2-3	COM	Ground
H3-4	BO5	Fan High Speed
H3-3	BO4	Fan Medium Speed
H3-2	BO3	Fan Low Speed
H3-1	NEUTRAL	Fan Neutral
H4-1, TB4-1	AI1	Outdoor Air Temp
H4-2, TB4-2	COM	Ground
TB2-1	BI1	Emergency Shutdown signal
TB2-2	24VAC	Emergency Shutdown 24VAC
TB3-1	BI3	Humidistat signal
TB3-2	24VAC	Humidistat 24VAC
H5-1	BI2	Dirty Air filter signal
H5-2	24VAC	Dirty Air Filter 24VAC

Figure 5: BACnet Communication Module

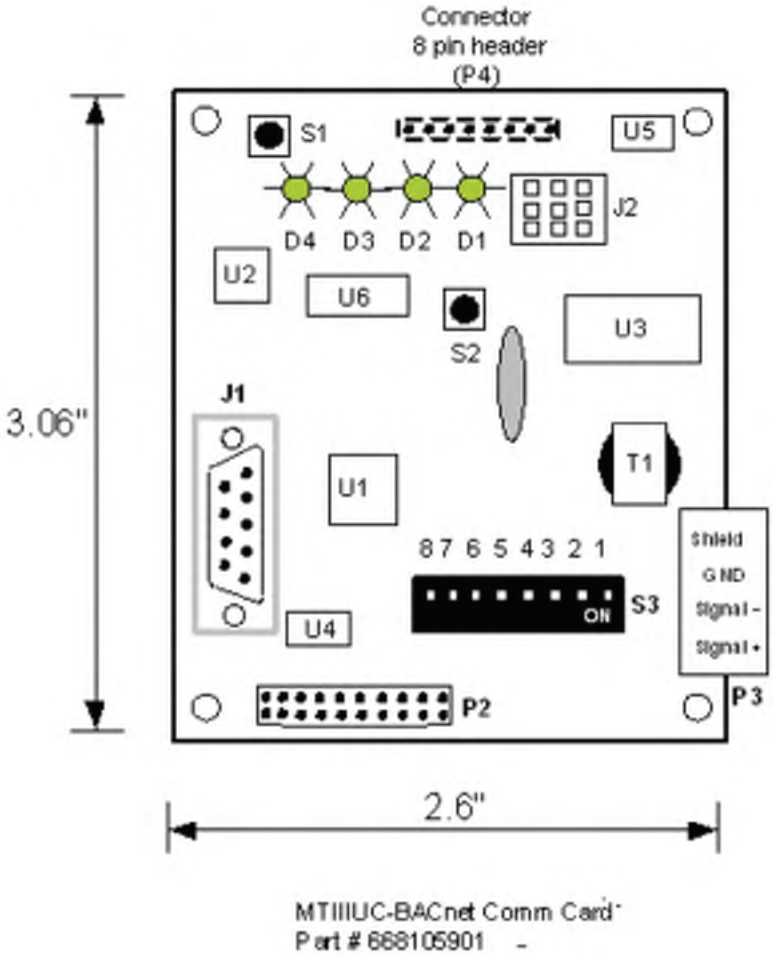

BACnet Communication Module

Table 6: BACnet Communication Module Connectors/Terminals

BACnet Module Connector – Terminal #	Silk Screen Label	Description
P3 – 1	P3	Network Signal +
P3 – 2		Network Signal –
P3 – 3		REF
P3 – 4		Shield

Figure 6: LonWorks Communication Module

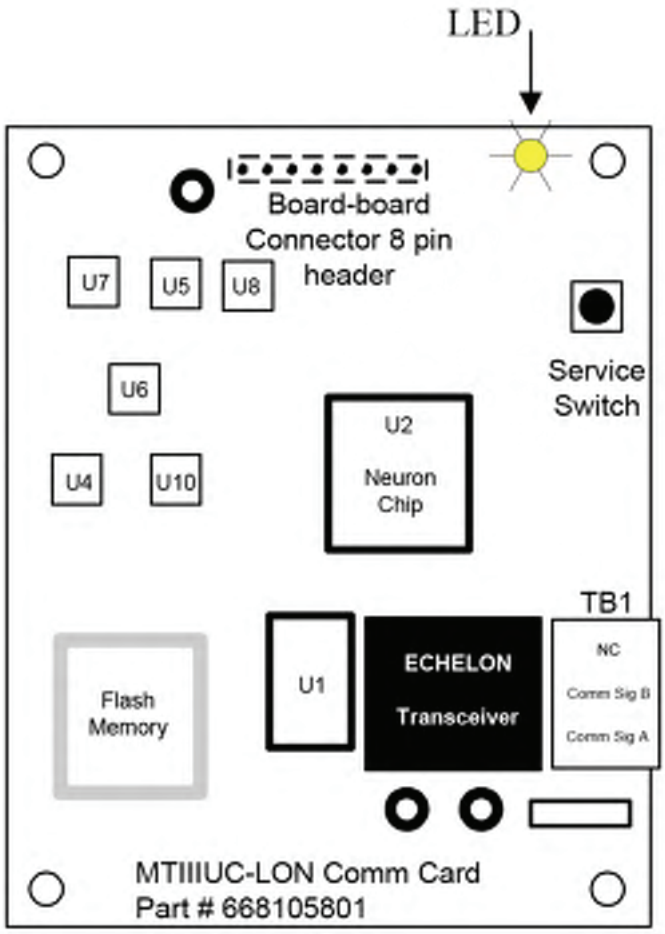

LonWorks Communication Module

Table 7: LON Communication Module Connectors/Terminals

LonWorks Module Connector – Terminal #	Silk Screen Label	Description
TB1 – 1	TB1	Network Signal A
TB1 – 2		Network Signal B
TB1 – 3		No Connection

The FCU primary operation depends on eight unit states of operation. When power is applied or controller is reset, the unit controller will go through a boot-up sequence, then go to the “Off” unit state. Refer to Table 8 and Table 9 for the state of every fan coil component in the Occupied and Unoccupied (Standby) Modes.

Possible FCU Machine States include:

- Off Alarm
- Off
- Start (Actuator calibration occurs if applicable)
- Fan Only (Fan is enabled, however may not be on)
- Heating
- Economizer
- Cooling (fan coils only)
- Dehumid [future option for Fan coils only: 2-Pipe in Cooling mode or 4-Pipe Modulating Heat & Cool Systems]

Fan Coil/Cabinet Unit Heater Control Output Tables

Table 8: UNOCCUPIED or STANDBY

(Economizer State & Dehumid State [future option] not allowed)

	Off Alarm	Off	Start	Fan Only	Heating	Economizer	Cooling	Dehumid [future option]
Fan	Off	Off	Off	Off	Highest	N/A	Highest	N/A
Cooling Valve	Note[1]	Closed[2]	Closed	Closed	Closed	N/A	Open	N/A
Heating Valve	Note [1]	Closed[2]	Closed	Closed	Open	N/A	Closed	N/A
Electric Heat	Off	Off	Off	Off	On	N/A	Off	N/A
Damper	Closed	Closed	Closed	Closed	Closed	N/A	Closed	N/A
Economizer	Closed	Unchanged	Closed	Closed	Closed	N/A	Closed	N/A

Table 9: OCCUPIED or BYPASS

(Economizer State allowed if enabled by Equipment Configuration)

	Off Alarm	Off	Start	Fan Only	Heating	Economizer	Cooling	Dehumid [future option]
Fan	Off	Off	Off	Controlled	Controlled	Controlled	Controlled	Controlled
Cooling Valve	Note[1]	Closed[2]	Closed	Closed	Closed	Closed	Controlled	Open
Heating Valve	Note[1]	Closed[2]	Closed	Closed	Controlled	Closed	Closed	Controlled
Electric Heat	Off	Off	Off	Off	On	Off	Off	Off
Damper	Closed	Closed	Closed	Controlled[3]	Open	Open	Open	Open
Economizer	Closed	Unchanged	Closed	Closed, Minimum[4]	Minimum	Controlled Min to Open	Open, Minimum[5]	Open, Minimum[5]

[1] Dependant on specific alarm, see “Alarm: Control & Reset Table”.
[2] Two position valves closed, modulating valves are unchanged.
[3] Damper open if fan is on, closed if fan is off
[4] Economizer closed if fan is off, otherwise at minimum position per fan speed
[5] Economizer open if available to cool, otherwise at min position per fan speed

Table 10: Fixed Timing Parameters Default Values

Fixed Timing Parameter	Normal
Condensate Overflow Alarm Activation Delay	60 sec
Dehumidification Minimum Off Timer	180 sec
Fan Runtime After Electric Heat Turnoff	30 sec
Fan Speed Change Timer	0.2 sec
Room Temperature Sensor Failure Delay When Analog Input Is Shorted	4 min
Valve & Economizer Calibration Interval	24 hrs

Table 11: Configuration Property Default Values

Configuration Property	Usable Range	Default Value	Description
nciBypassTime	0, 30 to 120 Min	120 m	Amount of time controller operates is in the bypass occupancy mode when the user activates the timed override function.
nciSetpoints:Occ_cool	50 to 95 °F	75 °F	Occupied operating mode cooling setpoint.
nciSetpoints:Stby_cool	50 to 95 °F	77 °F	Standby operating mode cooling setpoint.
nciSetpoints:Unoc_cool	50 to 95 °F	85 °F	Unoccupied operating mode cooling setpoint.
nciSetpoints:Occ_heat	50 to 95 °F	70 °F	Occupied operating mode heating setpoint.
nciSetpoints:Stby_heat	50 to 95 °F	66 °F	Standby operating mode heating setpoint.
nciSetpoints:Unoc_heat	50 to 95 °F	60 °F	Unoccupied operating mode heating setpoint.
nciOccDiff	1 to 5 °F	1 °F	Differential between the effective on and off setpoints when operating in the occupied mode.
nciUnoccDiff	2 to 10 °F	2 °F	Differential between the effective on and off setpoints when operating in the unoccupied mode.
nciEwtFlowTimer	60 to 600 Sec	120 s	Length of time flow is allowed after opening a hydronic valve before sampling the EWT.
nciEwtSampleTmr	0, 20 to 120 Min	120 m	Length of time between EWT sampling processes.
nciFanMinOffTmr	120 to 1200 Sec	180 s	Minimum length of time the fan must remain off after it initially turns off.
nciFanMinOnTmr	120 to 1200 Sec	180 s	Minimum length of time the fan must remain running after it initially turns on.
nciFltrChangeHrs	0, 360 to 4320 Hr	1440 hr	Length of time the fan operates before a dirty air filter alarm is generated.
nciLocSptEnable	Disable, Enable	Enable	Variable to enable or disable the use of the local setpoint adjustment input from the room sensor.
nciSptAdjMax	55 to 95 °F	95 °F	Long range setpoint adjust input maximum value.
nciSptAdjMin	55 to 95 °F	55 °F	Long range setpoint adjust input minimum value.
Hydronic Heating Control			
nciHeatEnDiff	2 to 10 °F	5 °F	EWT must be warmer than the room temperature at least by this amount for hydronic heating to be allowed in two pipe systems.
nciHeatIntStgTmr	120 to 1200 Sec	300 s	Inter stage time used between automatic heating capacity fan speed changes.
nciHeatKp	5 to 160 %	25 %	Hydronic heating valve PI control loop proportional gain setting.
nciHeatKi	0 to 1200 Sec	20 s	Hydronic heating valve PI control loop integral setting.
nciHeatDB	3 to 100 %	3 %	Hydronic heating valve actuator positioning deadband.
nciHeatVlvStroke	15 to 600 Sec	180 s	Hydronic heating valve actuator full travel time.
Hydronic Cooling Control			
nciCoolEnDiff	2 to 10 °F	5 °F	EWT must be colder than the room temperature at least by this amount for hydronic cooling to be allowed in two pipe systems.
nciCoolIntStgTmr	120 to 1200 Sec	300 s	Inter stage time used between automatic cooling capacity fan speed changes.
nciCoolKp	5 to 160 %	40 %	Hydronic cooling valve PI control loop proportional gain setting.
nciCoolKi	0 to 1200 Sec	30 s	Hydronic cooling valve PI control loop integral setting.
nciCoolDB	3 to 100 %	3 %	Hydronic cooling valve actuator positioning deadband.
nciCoolVlvStroke	15 to 600 Sec	180 s	Hydronic cooling valve actuator full travel time.
Economizer Cooling Control			
nciDaSptKp	5 to 160 %	40 %	Discharge air temperature setpoint PI control loop proportional gain setting.
nciDaSptKi	0 to 1200 Sec	20 s	Discharge air temperature setpoint PI control loop integral setting.
nciMaxDaSpt	50 to 80 °F	75 °F	Economizer PI control block setpoint maximum value when the discharge air PI control loop output is at 0%.
nciMinDaSpt	50 to 80 °F	55 °F	Economizer PI control block setpoint minimum value when the discharge air PI control loop output is at 100%.
nciEconOaEnDiff	1 to 12 °F	2 °F	Outdoor air temperature must be colder than the room temperature at least by this amount for Economizer cooling to be allowed.
nciEconOaEnSpt	40 to 80 °F	50 °F	Outdoor air temperature must be above this setpoint to allow Economizer cooling.
nciEconKp	5 to 160 %	90 %	Economizer positioning PI control loop proportional gain setting.
nciEconKi	0 to 1200 Sec	10 s	Economizer positioning PI control loop integral setting.
nciEconDB	3 to 100 %	3 %	Economizer actuator positioning deadband setting.
nciEconStroke	15 to 600 Sec	66 s	Economizer actuator full travel time.
nciEconLowMin	0 to 100 %	10 %	Economizer minimum position when the fan is operating at low speed.
nciEconMedMin	0 to 100 %	10 %	Economizer minimum position when the fan is operating at medium speed.
nciEconHighMin	0 to 100 %	10 %	Economizer minimum position when the fan is operating at high speed.

Note: Reference the ED15135 protocol information document for more details on configuration properties and other network variables.

Operating Modes

Start-up

The unit will not operate until all the inputs and safety controls are checked for normal conditions.

General Sequences of Operation

Fan Operation

The Table 12 describes fan operation in the various controller modes. Fan operation depends on the occupied/unoccupied status of the controller, the position of the room sensor mounted (or unit mounted) fan speed switch, and the capacity requested from the control algorithm.

Table 12: Fan Mode

Fan Mode	Occupied	Unoccupied
Off	Off	Off
Low	Low speed, continuous operation	Fan runs on low speed when heating or cooling capacity is required. Fan is off otherwise.
Medium	Medium speed, continuous operation	Fan runs on medium speed when heating or cooling capacity is required. Fan is off otherwise.
High	High speed, continuous operation	Fan runs on high speed when heating or cooling capacity is required. Fan is off otherwise.
Auto – Continuous	Fan runs continuously on low, medium or high depending on capacity required.	Fan runs on high speed when heating or cooling capacity is required. Fan is off otherwise.
Auto – Cycling	When no capacity is required, fan is off and damper is closed. When capacity is required, fan runs on low, medium or high depending on capacity required.	Fan runs on high speed when heating or cooling capacity is required. Fan is off otherwise.

Occupied/Unoccupied Operation

The occupied/unoccupied operation of the unit is either controlled from the occupied/unoccupied binary input or over the communications network. When in the occupied mode, the controller will control to the occupied heating and cooling setpoints. In the unoccupied mode, unoccupied heating and cooling setpoints will be used. Fan operation is as described above. Heating and cooling operation will not be enabled until the fan is running. When the occupied/unoccupied state of the controller is being controlled over the communications interface, the local binary input will be ignored.

Occupied Capacity Control

Occupied Operation

The board will be in Occupied mode if the unoccupied terminal (BI2) is not shorted to ground. Heating and cooling will not operate until the fan is running.

Cooling

If the room temperature is above the Occupied Cooling On Setpoint in the fan Auto Cycling mode, the fan will start before the cooling state is entered. After the fan is on, the cooling valve will open (two position valves) or a proportional-integral control algorithm will modulate the cooling valve open in an attempt to maintain the room temperature.

If the temperature remains above the Occupied Cooling On Setpoint for longer than a cooling stage time when the cooling valve is full open and the fan is on Low speed (auto fan mode), the fan will stage to Medium speed in an attempt to satisfy the load. If the temperature remains above the Occupied Cooling On Setpoint for longer than a cooling stage time when the cooling valve is full open and the fan is on Medium speed (auto fan mode), the fan will stage to High speed in an attempt to satisfy the load.

If the temperature is below the Cooling On Setpoint and the cooling Interstage timer has expired, the fan will stage from High to Medium speed. If the temperature is below the Cooling On Setpoint and the cooling Interstage timer has expired, the fan will stage from Medium to Low speed. If the temperature remains below the Cooling Off Setpoint for longer than the cooling stage time and the fan is at its lowest fan speed , cooling valve will close and the unit will enter the “Fan Only” state. When the Fan Minimum On timer has expired, the fan will turn off if fan cycling is enabled.

Heating

If the room temperature is below the Occupied Heating On Setpoint in the fan auto cycling mode, the fan will start before the heating state is entered. After the fan is on, the heating valve will open (two position valves), the electric heat will be enabled, or a proportional-integral control algorithm will modulate the heating valve open in an attempt to maintain the room temperature.

If the temperature remains below the Occupied Heating On Setpoint for longer than a heating stage time when the heating valve is full open and the fan is on Low speed (auto fan mode), the fan will stage to Medium speed in an attempt to satisfy the load. If the temperature remains below the Occupied Heating On Setpoint for longer than a heating stage time when the heating valve is full open and the fan is on Medium speed (auto fan mode), the fan will stage to High speed in an attempt to satisfy the load.

If the temperature is above the Heating On Setpoint and the heating Interstage timer has expired, the fan will stage from High to Medium speed. If the temperature is above the Heating On setpoint and the heating Interstage timer has expired, the fan will stage from Medium to Low speed. If the temperature remains above the Heating Off Setpoint for longer than the heating stage time and the fan is at its lowest fan speed the heating valve will close, electric heat will shut off, and the unit will enter the Fan Only state. When the Fan Minimum On and the Fan On After Electric Heat timers have expired, the fan will turn off if fan cycling is enabled.

Unoccupied Capacity Control

Cooling

When the room temperature rises above the Unoccupied Cooling On Setpoint, the fan will start in High speed and the cooling valve will fully open in an attempt to maintain room temperature. When the temperature is satisfied (temperature drops below the Unoccupied Cooling On Setpoint minus the unoccupied differential) and the cooling Interstage timer has expired, the valve will first close and then the fan will shut off.

Heating

When the room temperature falls below the Unoccupied Heating On Setpoint, the fan will start in High speed and the heating valve will fully open (or the electric heat will be enabled) in an attempt to maintain room temperature. When the temperature is satisfied (temperature rises above the Unoccupied Heating On Setpoint plus the unoccupied differential) and the heating Interstage timer has expired, the valve will first close, electric heat will shut off and then the fan will shut off.

Dehumidification Operation [future option]

This fan coil state is allowed for: 2-Pipe in Cooling only or 4-Pipe Modulating Heating & Cooling systems; and controller must be in the occupied or bypass mode. Modulating Cooling valve is fully open. Electric heat is off. Fresh Air Damper (if available) is open. Economizer, if available, will be fully open, otherwise at minimum position based on fan speed.

2-Pipe Cooling Only System:

- Fan is on at lowest available speed.
- Heating valve is non-existent.
- Dehumidification is only allowed when the effective space temperature is greater than the effective heating on setpoint, and becomes disabled when space temperature drops below the effective heating on setpoint minus a 2°F fixed differential.

4-Pipe Modulating Heating & Cooling System:

- Fan is on at speed determined by capacity and effective fan mode/speed.
- Heating valve is controlled.

General Operation

Unit status will change to the “Fan Only” state if all of the following conditions exist:

- Dehumidification isn’t required or is not available, heating or cooling capacity becomes required.
- The cooling valve has been driven closed.
- The 4-pipe system heating valve has been driven closed.
- Fan is running at the lowest possible speed based on: selected occupancy and fan mode/speed switch setting.

Dehumid State Notes

- For dehumidification availability definition, see “Miscellaneous Control Definitions section”.
- When leaving “Dehumid” state, the 180 second fixed “dehumidification minimum off” timer will be started. This prevents returning back to the “Dehumid” state too soon.

Total Electric Heat mode (2-pipe Cooling systems only)

On an initial call for heating:

1. The fan will start at Low speed in “Fan Only” state
2. Unit enters Heating state, electric heat is energized, and heating Interstage timer is started
3. If Heating Interstage Countdown Timer has expired and room temperature is below the Heating On Setpoint, fan speed will be changed from Low to Medium, and Heating Interstage Countdown Timer is started again.
4. If Heating Interstage Countdown Timer has expired and room temperature is below the Heating On Setpoint, fan speed will be changed from Medium to High, and Heating Interstage Countdown Timer is started again.

Once room temperature reaches the Heating On Setpoint the fan will be run at Medium and Low speed with Interstage Countdown Timer started each time the fan speed is changed. When the room setpoint conditions are satisfied, electric heat will be de-energized and the fan will continue to operate at its “fan only” setting when enabled, for continuous fan operation. If fan cycling is enabled, the fan will turn off after 30 seconds once room setpoint conditions are satisfied.

Supplemental (Intermediate) Electric Heat mode [for 2-pipe Cooling/Heating systems only]

On an initial call for heating, the controller will open the water valve for Flow Timer" to check for appropriate entering water temperature. Once the water valve is 100% open, a 120-second (default setting) flow timer will start and flow allowed. When timer has expired and if water temperature is colder than required for hydronic heating the control valve will fully closed, fan started and electric heater energized. The rest of the operation will run as described in paragraph Total Electric heat above exclusively using electric heat (EWT is not sampled for systems with Total Electric Heat).

Proportional–Integral Control Parameters

Associated with each Proportional-Integral (PI) control loop are three adjustable parameters: Proportional Gain (Kp), Integral Time (Ki), and Deadband (DB). When the fan coil unit (FCU) is properly sized for the space, the factory settings for these parameters will provide the best control action for all the various operating scenarios.

PI Control Algorithm

The PI control algorithm calculates the desired actuator output, and ranges from 0 to 100%.

Definitions:

- Error: Value is calculated one of two ways depending on the PI blocks fixed action type.

  Direct Acting Block: Error = (PV – SP)

  Reverse Acting Block: Error = (SP – PV)
- Process Variable (PV): Measured analog input reading.
- Sample Time: Scan rate of the PI control blocks, which is an internal fixed value of 10 seconds.
- Sum of Errors: Summation, or total, of all past errors.

Output Formula:

PI Output = (Kp × Error) + ((Sample Time × Sum of Past Errors) / Ki)

If field problems arise, first ensure these parameters are set back to the factory default settings. If adjustment is required, only make small adjustments to one parameter at a time. After each adjustment, induce an instantaneous error into the PI algorithm and allow enough time for the system to stabilize before making any further modifications. If you do not have the means to graph the process variable performance, record the actual measured value and set point for the duration of the test and then plot the results using a spreadsheet to determine the correct action to take.

⚠ CAUTION

Adjusting PI parameters can cause erratic unit operation, and potentially damage the equipment.

PI control parameters must only be adjusted by trained personnel having a complete understanding of how these parameters affect system operation. Generally these parameters do not need to be adjusted from the factory settings.

Proportional Gain

The proportional gain, or proportional action, causes the controlled output to change in proportion to the magnitude of the present error amount. Error is the difference between the sensors present value and the set point. When the Kp setting is too low, the process variable (PV) response will change too slowly. When the Kp setting is too high, the process variable response will excessively overshoot and possibly oscillate around the setpoint (SP). If faster system response is desired increase the proportional gain (Kp) setting. Use caution not to become too aggressive with the proportional gain setting to avoid causing system instability.

Integral Time

The integral time, or integral action, accumulates the error amounts and causes the controlled output to approach the set point over time in an attempt to eliminate any system offset. The smaller the integral (Ki) setting, the more the integral will affect the process under control. When the Ki setting is too low, the process variable (PV) will oscillate around the setpoint. When the Ki setting is too high, the process variable will never reach the setpoint.

Deadband

The deadband parameter serves two main purposes. First deadband prevents the actuator from constantly hunting or overcorrecting, and secondly ensures the actuator physically moves every time a new positioning command is given. Deadband will prevent small output changes from modifying the actuator position. When the deadband configuration property is set to 3%, the PI control output adjustment must exceed plus or minus 1.5%, or the actuator position will not be changed.

PI Control Blocks

The fan coil unit contains four PI control loop blocks. The PI control blocks are defined as follows:

1. Modulating Hydronic Heating Valve
2. Modulating Hydronic Cooling Valve
3. Economizer Discharge Air Temperature (DAT) Setpoint
4. Economizer Position

The following is a brief summary of the fan coil PI control blocks and their associated support functions. Applicable LonWorks network variables are listed first, along with their BACnet equivalent objects. Refer to the ED15135 protocol information document for more details pertaining to the fan coil network variables.

Table 13: PI Control Block #1 – Modulating Hydronic Heating Valve Control

Inputs / Outputs	Interpretation
Polarity Type: Reverse Acting (Not Adjustable)	Error is defined as: (Effective Heat SP minus Room Temp)
SP: Effective Heating Setpoint	The desired heating setpoint input.
PV: nvoSpaceTemp (AV-22)	Room temperature is used as the process variable input.
KP: nciHeatKp (Loop1:Proportional_ Constant)	Proportional gain used in the PI control algorithm.
KI: nciHeatKi (Loop1:Integral_ Constant)	Integral time used in the PI control algorithm.
Output: nvoHeatVlvOut (Loop1:Present_Value)	Heating valve position output command.
DB: nciHeatDB (AV-29)	Deadband used to determine if the PI output is applied to the heating valve positioning control.

Table 14: PI Control Block #2 – Modulating Hydronic Cooling Valve Control

Inputs / Outputs	Interpretation
Polarity Type: Direct Acting (Not Adjustable)	Error is defined as: (Room Temp minus Effective Cool SP)
SP: Effective Cooling Setpoint	The desired cooling setpoint input.
PV: nvoSpaceTemp (AV-22)	Room temperature is used as the process variable input.
KP: nciCoolKp (Loop2:Proportional_ Constant)	Proportional gain used in the PI control algorithm.
KI: nciCoolKi (Loop2:Integral_ Constant)	Integral time used in the PI control algorithm.
Output: nvoCoolVlvOut (Loop2:Present_Value)	Cooling valve position output command.
DB: nciCoolDB (AV-9)	Deadband used to determine if the PI output is applied to the cooling valve positioning control.

Table 15: PI Control Block #3 – Economizer Discharge Air Setpoint Control

Inputs / Outputs	Interpretation
Polarity Type: Direct Acting (Not Adjustable)	Error is defined as: (Room Temp minus Effective Cool SP)
SP: Effective Cooling Setpoint	The desired cooling setpoint input.
PV: nvoSpaceTemp (AV-22)	Room temperature is used as the process variable input.
KP: nciDASptKp (Loop3:Proportional_ Constant)	Proportional gain used in the PI control algorithm.
KI: nciDASptKi (Loop3:Integral_ Constant)	Integral time used in the PI control algorithm.
Output: nvoDASptOut (Loop3:Present_Value)	Economizer position output command.
Translator: nciMaxDaSpt (AV-11)	Translated DA temperature SP that is sent to PI block #4 when the PI output is at 0%.
Translator: nciMinDaSpt (AV-12)	Translated DA temperature SP that is sent to PI block #4 when the PI output is at 100%.

Table 16: PI Control Block #4 – Economizer Position Control

Inputs / Outputs	Interpretation
Polarity Type: Direct Acting (Not Adjustable)	Error is defined as: (DAT minus Discharge Air SP)
SP: Discharge Air SP from PI Control Block #3 Output	The desired DAT setpoint input. The PI block #3 output is translated into a discharge air temperature SP value.
PV: nvoDischAirTemp (AI-4)	Discharge air temperature is used as the process variable input.
KP: nciDASptKp (Loop4:Proportional_ Constant)	Proportional gain used in the PI control algorithm.
KI: nciDASptKi (Loop4:Integral_ Constant)	Integral time used in the PI control algorithm.
Output: nvoEconOut (Loop4:Present_ Value)	Economizer position output command.
DB: nciEconDB (AV-18)	Deadband used to determine if the PI output is applied to the Economizer positioning control.

Tuning the PI Blocks

If the temperature control behavior of the FCU is poor, it may be necessary to tune the PI control blocks of the cooling valve, heating valve, or economizer position. When tuning the control blocks, it is highly recommended that you follow the below procedure. Failure to do so may result in increased tuning time, and sub-par performance.

1. Zero out the Ki setting.
2. Choose a starting point for Kp
3. Introduce a step change to the room setpoint.
4. Observe FCU performance and temperature control
5. Adjust Kp based on the following graph:

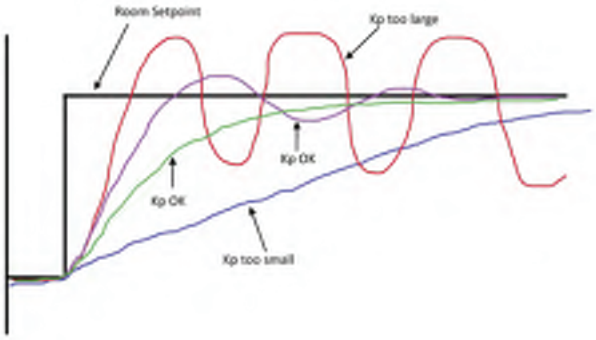

6. Repeat steps 3-5 until the temperature control matches the acceptable Kp behavior in the above graph. Behavior should be somewhere between the two “Kp OK” system responses detailed above. Please note that there may be an offset error after the Kp value is tuned. This is OK, as the Ki variable will eliminate the offset error.
7. While keeping Kp constant, choose a starting value for Ki
8. Introduce a step change to the room setpoint.
9. Observe FCU performance and temperature control
10. Adjust Ki based on the following graph::

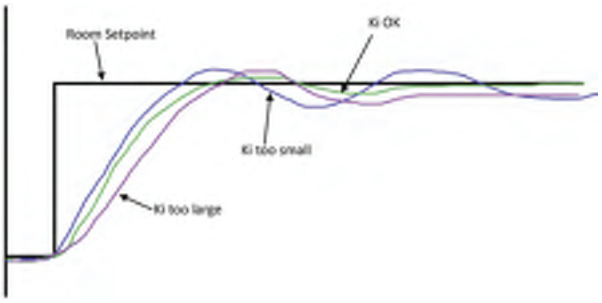

11. Repeat steps 8-10 until the FCU temperature control is acceptable. There should be no offset error and no temperature oscillations when the loops are fully and correctly tuned.

NOTE: The PI blocks controlling the economizer behavior (PI Control Block #3 & PI Control Block #4) are used in a ‘cascade’ arrangement, meaning the output of block #3 directly affects the behavior and output of block #4. If changes to the behavior of these blocks are needed, then both blocks should be tuned, to avoid negatively affecting the performance by just changing one of the control blocks. Block # 4 should be tuned first, followed by block #3. In addition, the PI control for the economizer behavior may be affected by the minimum damper position, or the minimum or maximum setpoint outputs (nciMaxDaSpt (AV-11) and nciMinDaSpt (AV-12)). If erratic temperature control behavior is exhibited, it should be investigated whether the PI block or these other settings are negatively affecting the performance.

Alarm Control Modes

- **Display Only:** Full control is maintained, alarm is for display purposes only.
- **Modified:** Normal unit control is slightly modified by this type of alarm.
- **Shutdown #1:** Fan & electric heat immediately turned off; damper & economizer closed; valves are unchanged.
- **Shutdown #2:** Fan & electric heat immediately turned off; damper & economizer closed; all valve types closed.
- **Shutdown #3:** Fan & electric heat immediately turned off; damper & economizer closed; previous control mode valve type is opened.

Table 17: Alarm Control & Reset Table

Room Sensor LED Pulses	Alarm Definition	Control Type	Auto Recover	Tenant Override Button Reset	Remote Clear Alarm
2	Invalid Equipment Configuration	Shutdown #1	No	No	No
3	Emergency Shutdown	Shutdown #2	Yes	No	No
4	Freeze Fault Detection	Shutdown #3	No	Yes	Yes
5	Entering Water Temp Sensor Fail (EWT Sampling Systems)	Shutdown #2	No	No	Yes
6	Room Temp Sensor Fail	Shutdown #2	No	No	Yes
7	IO Expansion Communications Fail (IO Exp Board Selected)	Shutdown #2	Yes	No	No
8	Condensate Overflow (Econ, Cool, & Dehumid Modes Only) (Fixed 60s Delay)	Shutdown #2	Yes[1]	No	Yes
9	Outdoor Air Temp Sensor Fail (Economizer Selected)	Modified: Disable Economizer	No	No	Yes
10	Discharge Air Temp Sensor Fail (Economizer Selected)	Modified: Disable Economizer	No	No	Yes
11	Dirty Air Filter (currently based on settable timer)[2]	Display Only	No	Yes	Yes
12	Serial EEPROM Corrupted	Display Only	No	No	No

1) Auto recover is subject to intelligent alarm reset

2) Timer is user-adjustable through network. Setting timer to 0 (zero) disables the alarm. Refer to ED 15135 for more details Alarm conditions are listed in order of priority.

Heating Capacity Required

Heating capacity is considered “required” when Effective Space Temperature (nvoSpaceTemp) goes below calculated effective heating on setpoint; then becomes “not required” when the temperature goes above calculated effective heating off setpoint.

Cooling Capacity Required

Cooling capacity is considered “required” when Effective Space Temperature (nvoSpaceTemp) goes above calculated effective cooling on setpoint; then becomes “not required” when the temperature goes below calculated effective cooling off setpoint. Economizer state, if available, has priority over cooling state.

Dehumidification Required

Dehumidification is considered “required” when the humidistat binary input is active, and no heating or cooling capacities are required. Also in 2-Pipe cooling only systems, the effective space temperature (nvoSpaceTemp) must be greater than the effective heating on setpoint for dehumidification to be allowed

Fan Availability

Fan is considered available if all of the following conditions exist:

- Equipment configuration software jumper (nciSoftJumpers) has selected a valid fan speed type.
- Remote application mode (nviApplicMode) is not set to “Off”.
- Local hardwired fan mode/speed switch (nvoFanModeSpdSw) is not set to “Off”.
- The “fan minimum off” timer has expired.

Dehumidification Availability

Dehumidification is considered available if all of the following conditions exist:

- Equipment configuration software jumper (nciSoftJumpers) states that a 2-Pipe hydronic cooling only without electric heat; or 4-Pipe hydronic modulating heating and cooling system is selected in the fan coil unit.
- For 2-Pipe Cooling only systems the Effective Space Temperature (nvoSpaceTemp) must be above the Effective Heating On setpoint.
- Remote application mode (nviApplicMode) is set to “Auto”, “Dehumid”, or “Null”.
- Local Heat/Cool/Auto mode switch (nvoHeatCoolAuto) is set to “Auto” or “Cool”.
- I/O expansion board communications is not failed.
- Effective occupancy (nvoEffectOccup) is occupied or bypass mode.
- The fixed “dehumidification minimum off” timer has expired.
- Condensate overflow alarm is not active.

Economizer Availability

Economizer is considered available if all of the following conditions exist:

- Equipment configuration software jumper (nciSoftJumpers) states economizer is present in the fan coil unit.
- Remote application mode (nviApplicMode) is set to “Auto”, “Economy”, or “Null”.
- Local Heat/Cool/Auto mode switch (nvoHeatCoolAuto) is set to “Auto” or “Cool”.
- Effective occupancy (nvoEffectOccup) is occupied or bypass mode.
- Difference between indoor and outdoor air temperature is greater than economizer indoor to outdoor air control enable differential (nciEconIOAEnDiff) setting for ability to cool. Prevents using outdoor air that’s too hot.
- Outdoor air temperature is greater than economizer outdoor air temperature control enable (nciEconOAEn) setting. Prevents using outdoor air that’s too cold.
- I/O expansion board communications failure alarm is not active.
- Condensate overflow alarm is not active.
- Outdoor air temperature sensor failure alarm is not active.
- Discharge air temperature sensor failure alarm is not active.

Electric Heating Availability

Electric heating is considered available if all of the following conditions exist:

- Equipment configuration software jumper (nciSoftJumpers) states electric heating is selected in the fan coil unit.
- Remote application mode (nviApplicMode) is set to “Auto”, “Heat”, or “Null”.
- Local Heat/Cool/Auto mode switch (nvoHeatCoolAuto) is set to “Auto” or “Heat”.

Hydronic Heating Availability

Hydronic heating is considered available if all of the following conditions exist:

- Equipment configuration software jumper (nciSoftJumpers) states hydronic heating is selected in the fan coil unit.
- Remote application mode (nviApplicMode) is set to “Auto”, “Heat”, or “Null”.
- Local Heat/Cool/Auto mode switch (nvoHeatCoolAuto) is set to “Auto” or “Heat”.

Hydronic Cooling Availability

Hydronic cooling is considered available if all of the following conditions exist:

- Equipment configuration software jumper (nciSoftJumpers) states hydronic cooling is selected in the fan coil unit.
- Remote application mode (nviApplicMode) is set to “Auto”, “Cool”, or “Null”.
- Local Heat/Cool/Auto mode switch (nvoHeatCoolAuto) is set to “Auto” or “Cool”.
- Condensate overflow alarm is not active.

Replacing a MicroTech Circuit Board

⚠ WARNING

The MicroTech circuit board incorporates static sensitive de-vices. A static charge from touching the device can damage the electronic components. To help prevent damage during service, use static discharge wrist straps. Static discharge wrist straps are grounded to the fan coil chassis through a 1 MOhm resistor.

Replacement part is shipped from Daikin with correct configuration preset at the factory.

1. Connect grounding wrist strap to unit.
2. Remove faulty board and place on static protected surface.
3. Remove replacement board from static protected bag.

Do not touch circuit board; hold by edges.

4. Holding board in grounded hand, install board in unit.
5. Insert faulty board in empty static bag for return.

NOTE: The new board needs to have correct equipment configuration performed at the factory otherwise it will not operate properly. Contact Daikin factory representative for directions.

Equipment Configuration Settings

Configuration property variable are used to determine the equipment configuration; which are read from the serial EEPROM when the controller initially boots. The FCU control option bits are then initialized based on the “nciSoftJumpers” values read from the serial EEPROM. The controller must be rebooted after modifying the software configuration settings before they will be used in controlling the FCU. Setting is considered: open when bit is zero, and closed when bit is one.

Table 18: Equipment Configuration Setting Options

Function	Bit/Binary Setting	Model/Feature
Service Test Mode	Byte 1: b0	0 = Normal Operation 1 = Service Test Mode
Continuous/Cycling Fan	Byte 1: b1	0 = Continuous Fan 1 = Cycling Fan
Setpoint Adjust – Temperature Range	Byte 1: b2	0 = Short Range (-5 to +5 °F) 1 = Long Range (55 to 95 °F)
IO Expansion Board Selection	Byte 1: b3	0 = No IO Expansion Board Present 1 = Enable IO Expansion Board
Economizer Selection	Byte 1: b4	0 = No Economizer Present 1 = Enable Economizer Use
N.O./N.C. Two Position Heating Valve	Byte 1: b5	0 = Normally Open Heating Valve 1 = Normally Closed Heating Valve
N.O./N.C. Two Position Cooling Valve	Byte 1: b6	0 = Normally Open Cooling Valve 1 = Normally Closed Cooling Valve
Two Position/Modulating Valves	Byte 1: b7	0 = Two position Hydronic Valves 1 = Modulating Hydronic Valves
Electric Heat Selection	Byte 2: b1=0, b0=0 Byte 2: b1=0, b0=1 Byte 2: b1=1, b0=0	00 = No Electric Heating 01 = One Stage Electric Heat 10 = Two Stage Electric Heat (Future) 11 = Not Valid
Hydronic Valves Selection	Byte 2: b4=0, b3=0, b2=0 Byte 2: b4=0, b3=0, b2=1 Byte 2: b4=0, b3=1, b2=0 Byte 2: b4=0, b3=1, b2=1 Byte 2: b4=1, b3=0, b2=0	000 = No Hydronic Valves 001 = 2-Pipe Heating Only 010 = 2-Pipe Cooling Only 011 = 2-Pipe Heat & Cool Changeover 100 = 4-Pipe Hydronic Heat & Cool
Fan Speed Selection	Byte 2: b6=0, b5=0 Byte 2: b6=0, b5=1 Byte 2: b6=1, b5=0	00 = 1Speed (Uses: High) 01 = 2Speed (Uses: Low, High) 10 = 3Speed (Uses: Low, Med, High)
Freeze Fault Detect Binary Input Selection	Byte 2: b7	0 = Disable Binary Input 1 = Enable Binary Input
Emergency Shutdown Binary Input Selection	Byte 3: b0	0 = Disable Binary Input 1 = Enable Binary Input
Dirty Air Filter* Binary Input Selection	Byte 3: b1	0 = Disable Binary Input 1 = Enable Binary Input
*Currently functions based on user-adjustable timer		

MicroTech Unit Controller with an optional LonWorks® Communication Module

For installation and operation information on LonWorks Communication Module and other ancillary control components, see:

- IM 1012 — MicroTech III Fan Coil LonWorks Communication Module.
- IM 933 — LonMaker Integration Plug-in Tool: For use with the MicroTech III Unit Controller.
- IM 1171 — Digitally Adjustable Display Sensor Installation and Maintenance Manual

Each Daikin ThinLine fan coil can be equipped with a LonWorks communication module that is LonMark 3.4 certified to meet the LonMark Space Comfort Control (SCC) profile for fan coils. The controller is microprocessor-based and is designed to communicate over a LonWorks network with the optional factory or field-installed communication module.

The unit controller is programmed and tested with all the logic required to monitor and control the unit. An optional wall sensor may be used with the communication module to provide limited local control of the Fan Coil or Cabinet Unit Heater unit. The unit controller monitors water and air temperatures and passes information to the communication module. The module communicates with the BAS to provide network control of the Fan Coil or Cabinet Unit Heater unit.

Figure 7: LonWorks Communication Module

The MicroTech unit controller with communication module includes a unit-mounted discharge air and entering water temperature sensors. Entering air temperature can be monitored either by selecting either unit-mounted return air temperature or wall- mounted room temperature sensors. Room sensor options includes one with a setpoint adjustment, unit mode, fan speed, and tenant override. See actual sensor to make sure these options are present.

MicroTech Unit Controller with LonWorks Communication Module orchestrates the following unit operations:

- Enable heating and cooling to maintain setpoint based on a room sensor
- Monitors all equipment protection controls
- Monitors room and discharge air temperatures
- Monitors outside air temperature for units with economizer option
- Relays status of all vital unit functions

The MicroTech unit controller with an optional communication module should include:

- Return Air Temperature sensor (RAT) (factory- or field-mounted)
- Discharge Air Temperature sensor (DAT) (factory- or field-mounted)
- Entering Water Temperature sensor (EWT) (factory- or field-mounted)

NOTE: Refer to IM 956 for details to install (RAT) & (DAT)

⚠ WARNING

When an optional wall-mounted room temperature sensor is connected to the unit controller, the Return Air Temperature (RAT) sensor must not be installed. A wall-mounted room temperature sensor and the return air temperature sensor must not be connected simultaneously or the unit will not operate properly.

The communication module provides access to setpoints for operational control

Available wall sensors include:

- Room sensor with LED status and tenant override button
- Room sensor with LCD display, fan speed selection switch, tenant override button, and ±5°F setpoint adjustment
- Room sensor with LCD display, fan speed selection switch, tenant override button, 55° to 95°F setpoint adjustment

MicroTech Unit Controller with an optional BACnet® Communication Module

For installation and operation information on MicroTech unit controller and other ancillary components, see:

- IM 1013 — MicroTech Fan Coil BACnet Communication Module
- IM 1171 — Digitally Adjustable Display Sensor Installation and Maintenance Manual

Daikin ThinLine fan coils and cabinet unit heaters are available with an optional BACnet MS/TP communication module that is designed to communicate over a BACnet MS/TP communications network to a building automation system (BAS). It can be factory or field-installed.

The module makes operational data and commands available on a communications network using BACnet objects and properties:

- The network cable is a shielded twisted-pair cable
- Network communications run up to 76.8 Kbps
- DIP switches on the controller enable the MS/TP MAC address to be set in the range 0-127
- Four green status LEDs on the communication module indicate communication activity on the MS/TP communication network and with the unit controller

Figure 8: MicroTech BACnet MS/TP Snap-in Communication Module

The unit controller is programmed and tested with all the logic required to monitor and control the unit. An optional wall sensor may be used with the communication module to provide limited local control of the fan coils and cabinet unit heater unit. Room sensor options include one with a setpoint adjustment, unit mode, fan speed, and tenant override. See actual sensor to make sure these options are present.

The unit controller monitors water and air temperatures and passes information to the communication module. The module communicates with the BAS, to provide network control of the fan coils and cabinet unit heater unit.

MicroTech Unit Controller with BACnet MS/TP Communication Module orchestrates the following unit operations:

- Enable heating and cooling to maintain setpoint based on a room sensor
- Monitors all equipment protection controls
- Monitors room and discharge air temperatures
- Monitors outside air temperature for units with economizer option
- Relays status of all vital unit functions

The MicroTech unit controller with an optional communication module should include:

- Return Air Temperature sensor (RAT) (factory- or field-mounted)
- Discharge Air Temperature sensor (DAT) (factory- or field-mounted)
- Entering Water Temperature sensor (EWT) (factory- or field-mounted)

NOTE: Refer to IM 956 for details to install (RAT) & (DAT)

⚠ WARNING

When an optional wall-mounted room temperature sensor is connected to the unit controller, the Return Air Temperature (RAT) sensor must not be installed. A wall-mounted room temperature sensor and the return air temperature sensor must not be connected simultaneously or the unit will not operate properly.

The communication module provides access to setpoints for operational control

Available wall sensors include:

- Room sensor with LED status and tenant override button
- Room sensor with LCD display, fan speed selection switch, tenant override button, and ±5°F setpoint adjustment
- Roomsensor with LCD display, fan speed selection switch, tenant override button, 55° to 95°F setpoint adjustment

Typical Wiring Diagrams

Figure 9: 1 PSC Motor, No Electric Heat, 2 Position Actuators, 2 Position Valves – Page 1

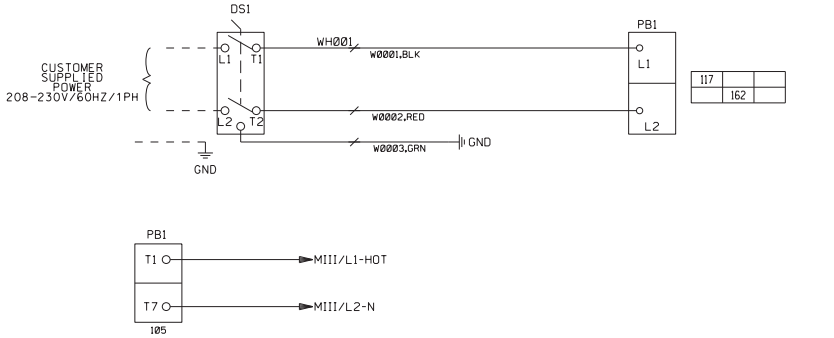

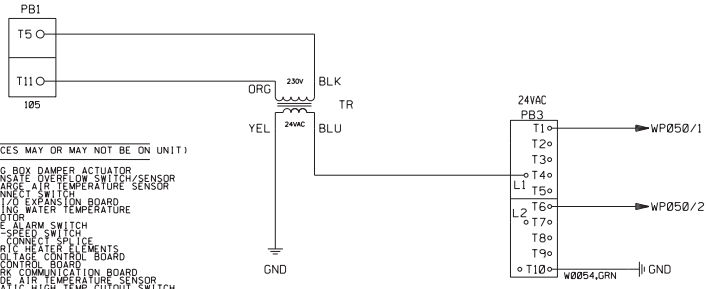

LEGEND: (DEVICES MAY OR MAY NOT BE ON UNIT)

ACT	MIXING BOX DAMPER ACTUATOR
CDS	CONDENSATE OVERFLOW SWITCH/SENSOR
DAT	DISCHARGE AIR TEMPERATURE SENSOR
DS	DISCONNECT SWITCH
EB	MIII I/O EXPANSION BOARD
EWT	ENTERING WATER TEMPERATURE
FM1-2	FAN MOTOR
FRZ	FREEZE ALARM SWITCH
FSW	FAN 3-SPEED SWITCH
GQ75	QUICK CONNECT SPLICE
HTR1-4	ELECTRIC HEATER ELEMENTS
LVB	LOW VOLTAGE CONTROL BOARD
MIII	MIII CONTROL BOARD
NCB	NETWORK COMMUNICATION BOARD
OAT	OUTSIDE AIR TEMPERATURE SENSOR
OHA	AUTOMATIC HIGH TEMP CUTOUT SWITCH
OHM	MANUAL HIGH TEMP CUTOUT SWITCH
PB1	MAIN POWER DISTRIBUTION BLOCK
PB2	ELECTRIC HEAT POWER DISTRIBUTION BLOCK
PB3	24VAC POWER DISTRIBUTION BLOCK
TB4	ECM MOTOR CONTROL TERMINAL BLOCK
TB5	INTERMEDIATE ELECTRIC HEAT TERMINAL BLOCK
TB6	NO CONTROLS TERMINAL BLOCK
RAT	RETURN AIR TEMPERATURE SENSOR
R1-2	ELECTRIC HEATER POWER RELAY
R3	ELECTRIC HEATER CONTROL RELAY
TS1-2	THERMAL SWITCH (INTERMEDIATE ELECTRIC HEAT)
TS3	THERMAL SWITCH (AUTOMATIC CHANGE OVER)
TR	CONTROL TRANSFORMER
VLV1-2	COIL VALVE ACTUATOR (PRIMARY OR SECONDARY)
Wxxx	WIRE
WHxxx	WIRE HARNESS
WPxxx	WIRE PLUG
WNxxx	WIRE NUT

Figure 10: 1 PSC Motor, No Electric Heat, 2 Position Actuators, 2 Position Valves – Page 2

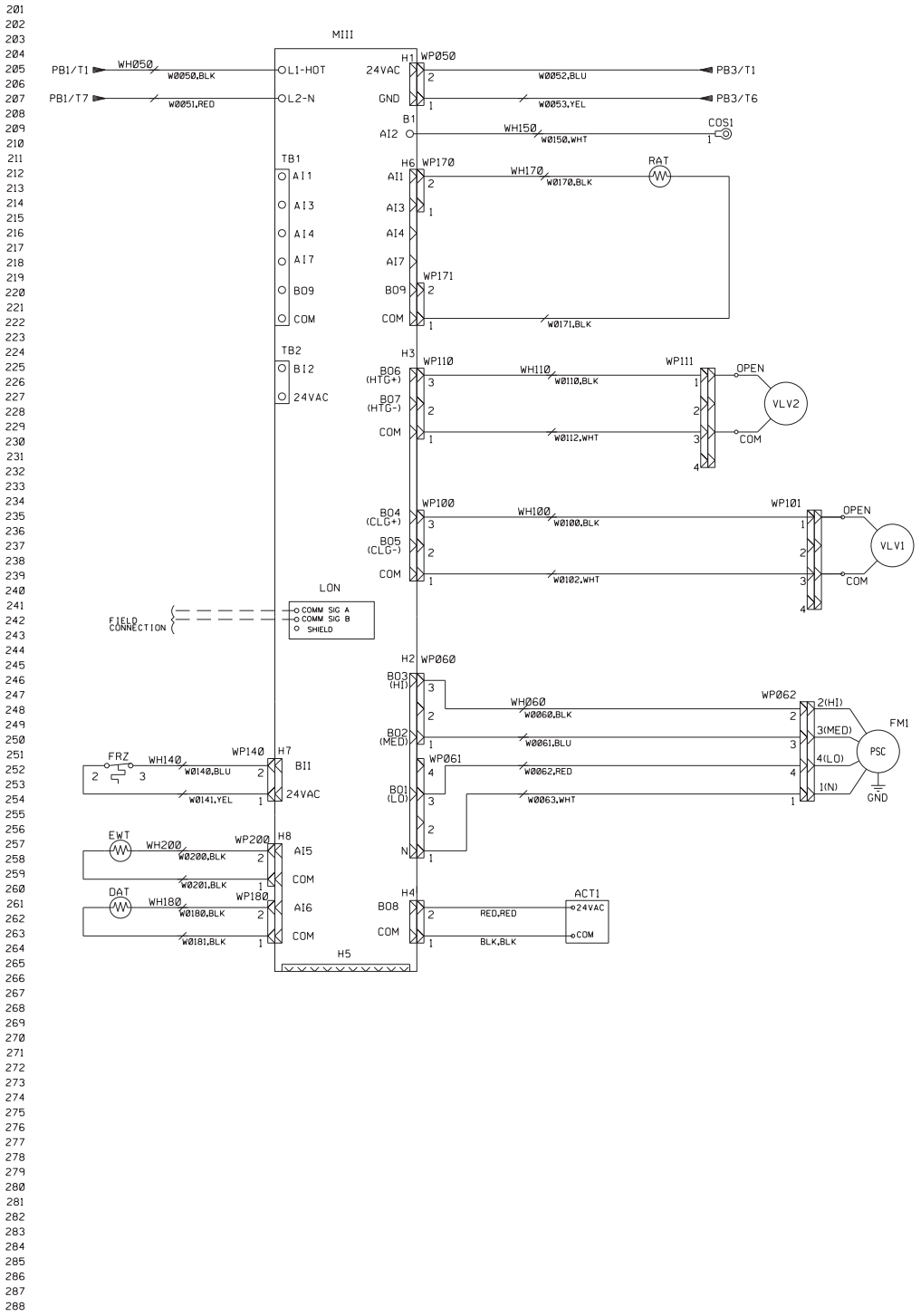

Figure 11: 1 PSC Motor, No Electric Heat, Valve1 FLT, No Return Air Temperature – Page 1

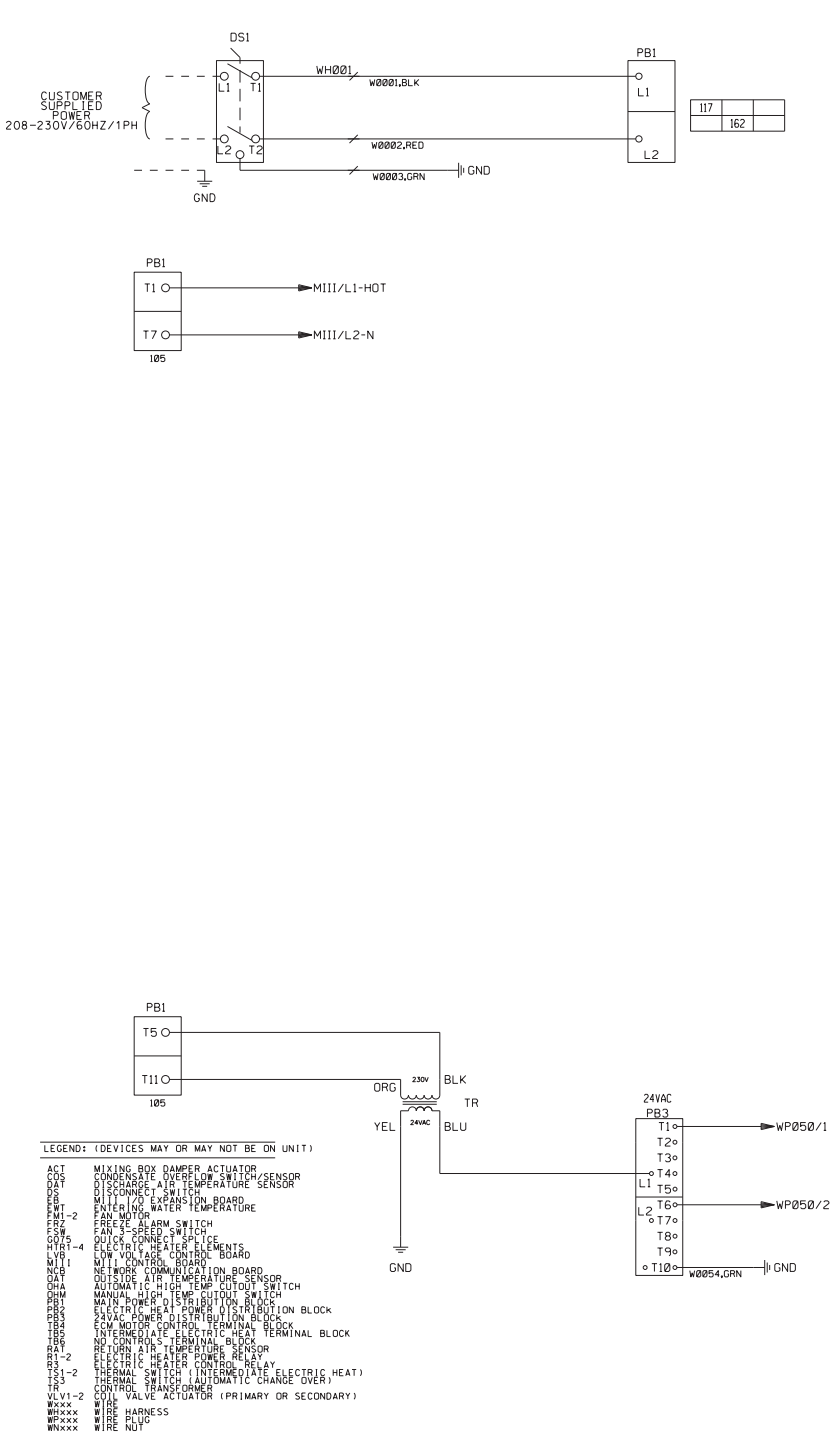

Figure 12: 1 PSC Motor, No Electric Heat, Valve1 FLT, No Return Air Temperature – Page 2

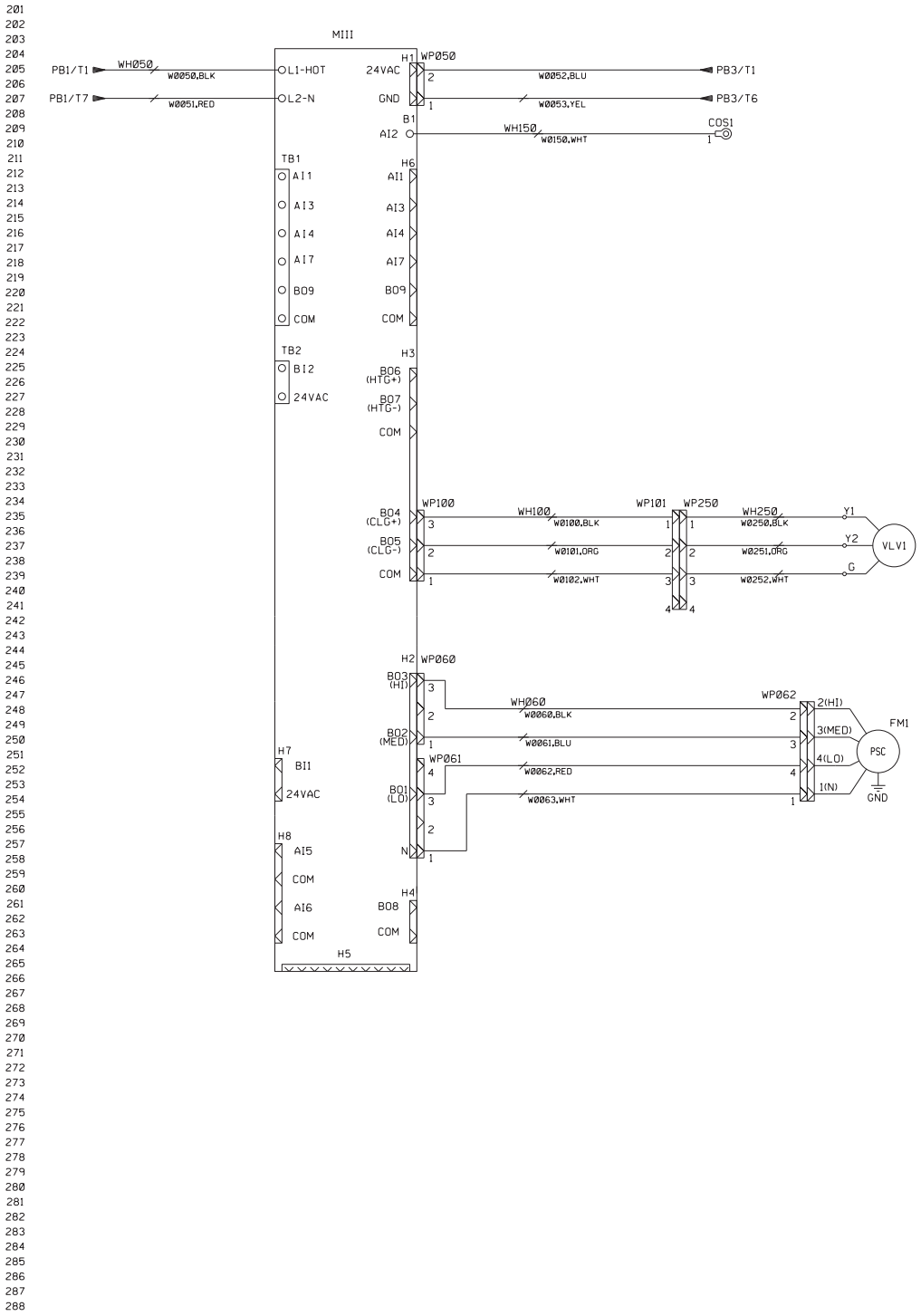

Figure 13: ECM Motor, Electric Heat, 230V, Economizer – Page 1

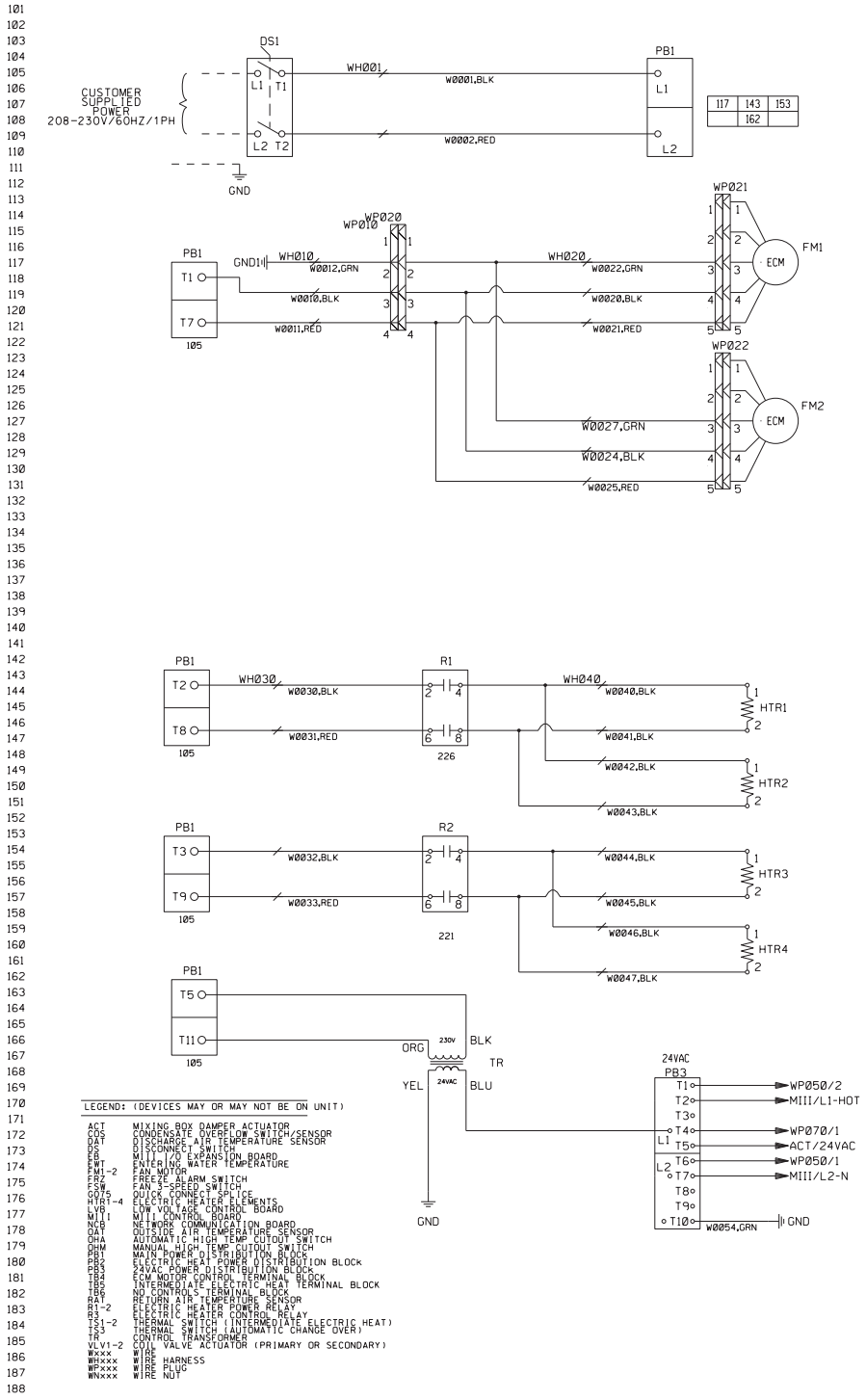

Figure 14: ECM Motor, Electric Heat, 230V, Economizer – Page 2

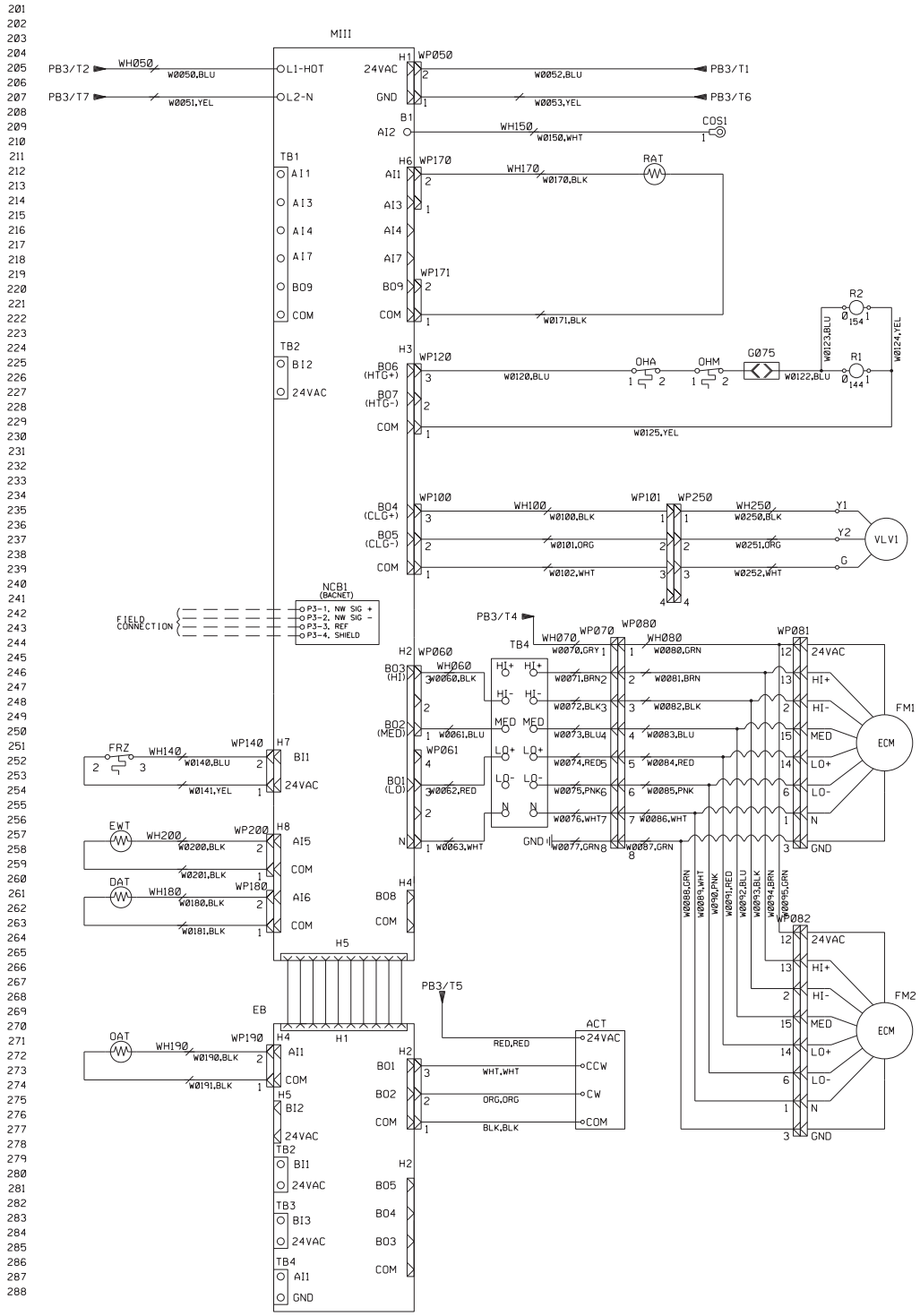

Daikin Applied Training and Development

Now that you have made an investment in modern, efficient Daikin equipment, its care should be a high priority. For training information on all Daikin HVAC products, please visit us at www.DaikinApplied.com and click on Training, or call 540-248-9646 and ask for the Training Department.

Warranty

All Daikin equipment is sold pursuant to its standard terms and conditions of sale, including Limited Product Warranty. Consult your local Daikin Applied representative for warranty details. To find your local Daikin Applied representative, go to www.DaikinApplied.com.

Aftermarket Services

To find your local parts office, visit www.DaikinApplied.com or call 800-37PARTS (800-377-2787).
To find your local service office, visit www.DaikinApplied.com or call 800-432-1342.

This document contains the most current product information as of this printing. For the most up-to-date product information, please go to www.DaikinApplied.com.

Products manufactured in an ISO Certified Facility.

OM 1111-2 (10/15)

©2015 Daikin Applied | (800) 432–1342 | www.DaikinApplied.com

Sales and Engineering Data

ED 19059-2

Group: **Applied Air Systems**
Part Number: **ED 19059**
Date: **October 2015**

ThinLine and Large Cap Fan Coils

ECM Speed Adjustment Board (EVO Board)

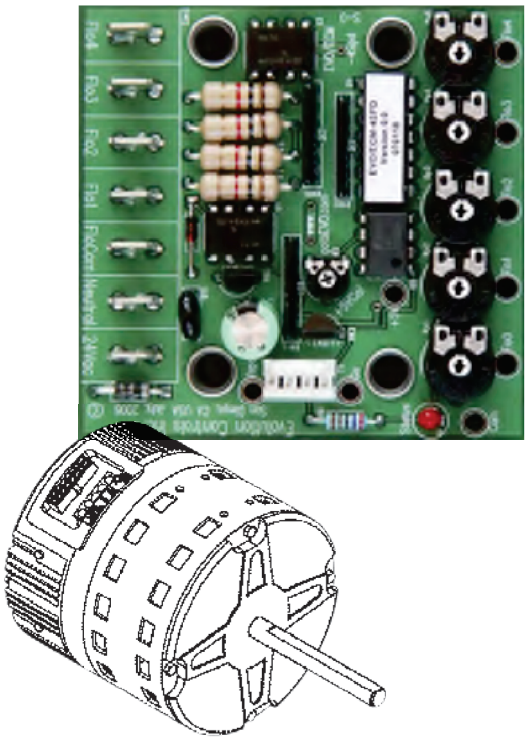

Overview

The constant CFM ECM when wired to with the ECM speed adjustment board (EVO Board) allows the user the manually adjust the airflow for each of the three fan speeds by turning a dial. Each speed may be adjusted across the full RPM range of the motor and once set the new flow rate will then be maintained by the motor despite changes to the system static pressure. The CFM for each speed setting may be determined by measuring the airflow in the system or by measuring the DC voltage between the adjusted terminal and the reference point on the board. If desired, the motor may be used without speed adjustment by replacing the wire harness from the EVO board with the standard wire harness. In this case the motor will run at the factory programmed flow rates.

Connecting the Unit to Field Power

Line voltage power wires L1 and Com are connected to S2 as shown. A factory provided step down transformer provides 24VAC power for the ECM control and the EVO board and the factory provided 16 pin wire harness connects the EVO board to the ECM (Figure 7 and Figure 8).

Connecting the Unit to a 24V Thermostat or Controller

The factory provided 24VAC transformer should be used to provide power for the field mounted t-stat by connecting the 24V input to TB2 terminal B and the common to TB2 terminal E. The three t-stat fan speed outputs are connected to the EVO board spade terminals labeled Flo1, Flo2 and Flo3 (Figure 1). When a t-stat fan speed output is energized, the fan will run at the speed set at the corresponding flow dial until the speed output is de-energized.

Figure 1: EVO Board Key Components and Locations

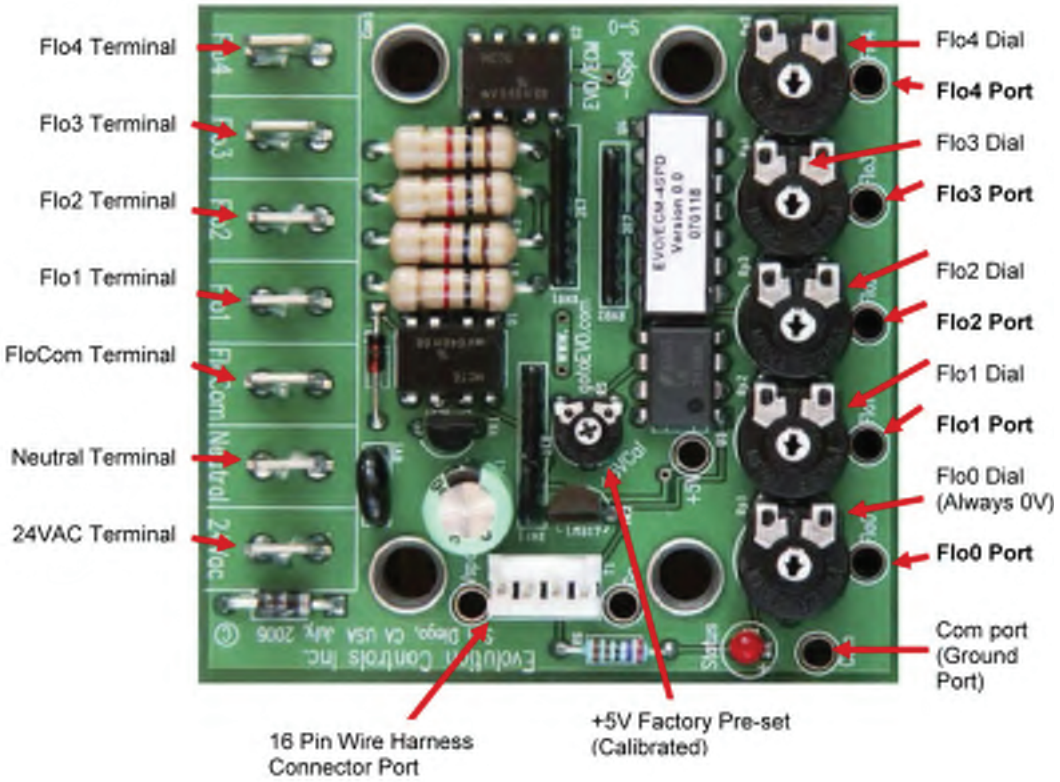

Adjusting Fan Speed

The fan will run at the factory set flow rates when the unit is installed. If different flow rate is required, turn the flow dial (Figure 1) corresponding to the Flo terminal until the desired CFM is achieved or the measured DC reference voltage between the com port and corresponding flo port equals the correct value from Table 2 through Table 13 on page 8.

For example, if terminal Flo1 is on and the Flo1 dial is turned until the Flo1 reference voltage = 2.5, then the motor will run at the CFM that corresponds to 2.5V.

NOTE: The Flo0 dial should always be set at 0V to prevent the fan from running when all speed outputs are OFF.

Bypassing the EVO board

If the EVO board should fail or if it is not needed, the EVO board may be bypassed allowing the ECM to operate at the factory programmed fixed flow rates. To bypass the EVO board unplug the 16 pin EVO board wire harness (Figure 3) from the ECM and the board and remove it from the unit. Locate the standard 16 pin wire harness (included in the unit paper work packet) and plug it into the motor. The individual wires on the other end of the harness connect wire 78 (blue) to terminal C on terminal block TB2 and wire 73 (green) to terminal D on terminal block TB2. Connect the five fan speed wires, 77, 74, 75, 76, and 80 to terminals HI+, HI-, MED, LO+ and LO- respectively on terminal block TB4. Connect the field mounted t-stat 24V+ and common to terminals B and E, respectively, on terminal block TB2. Apply 24V to any of the five speed inputs on TB4 to run motor at that speed

Figure 2: Typical EVO Board Wiring for a Single Motor Large Cap Unit

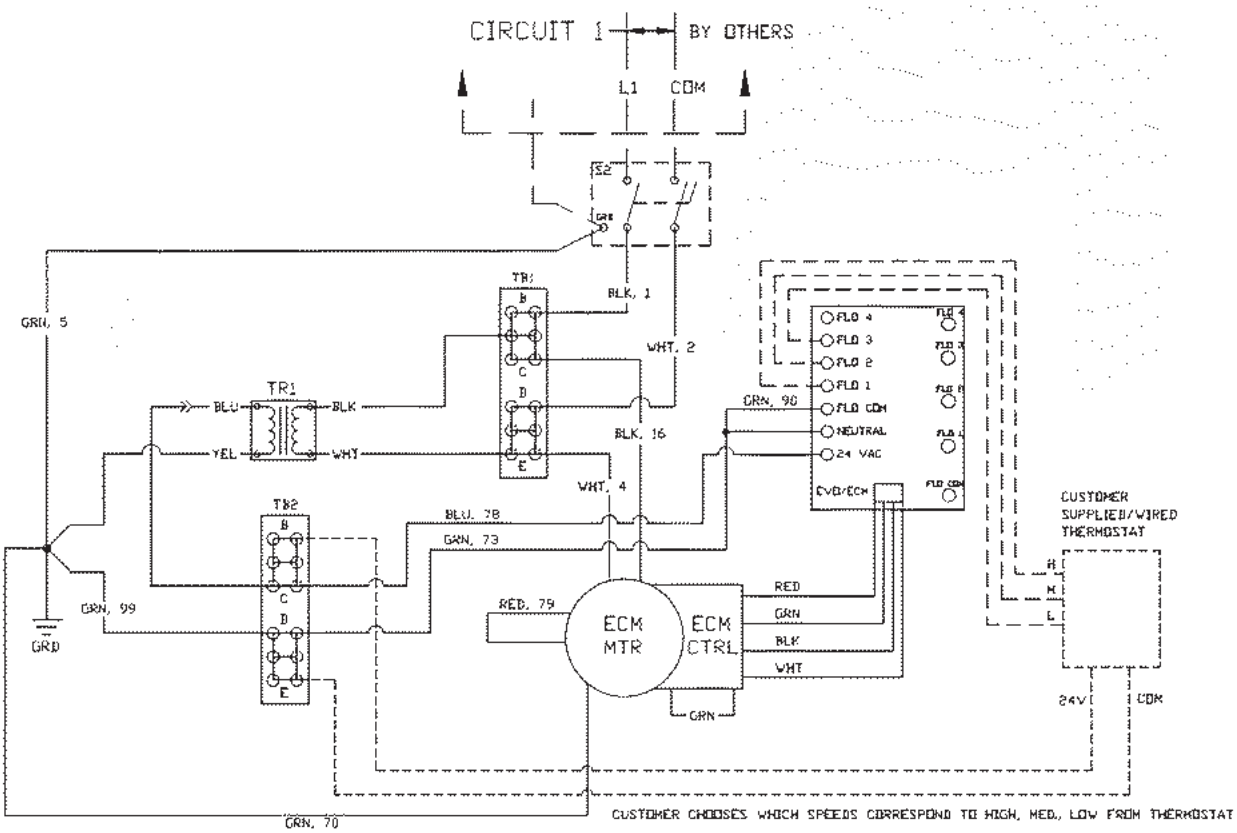

Figure 3: Single Motor EVO Board Bypass Wiring Detail for Large Cap Unit

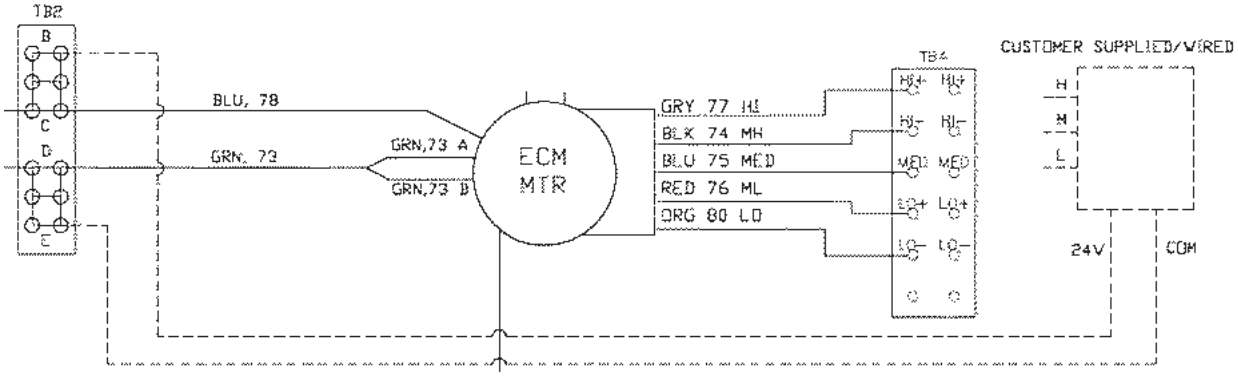

Figure 4: Two Motor EVO Board Bypass Wiring Detail for Large Cap Unit

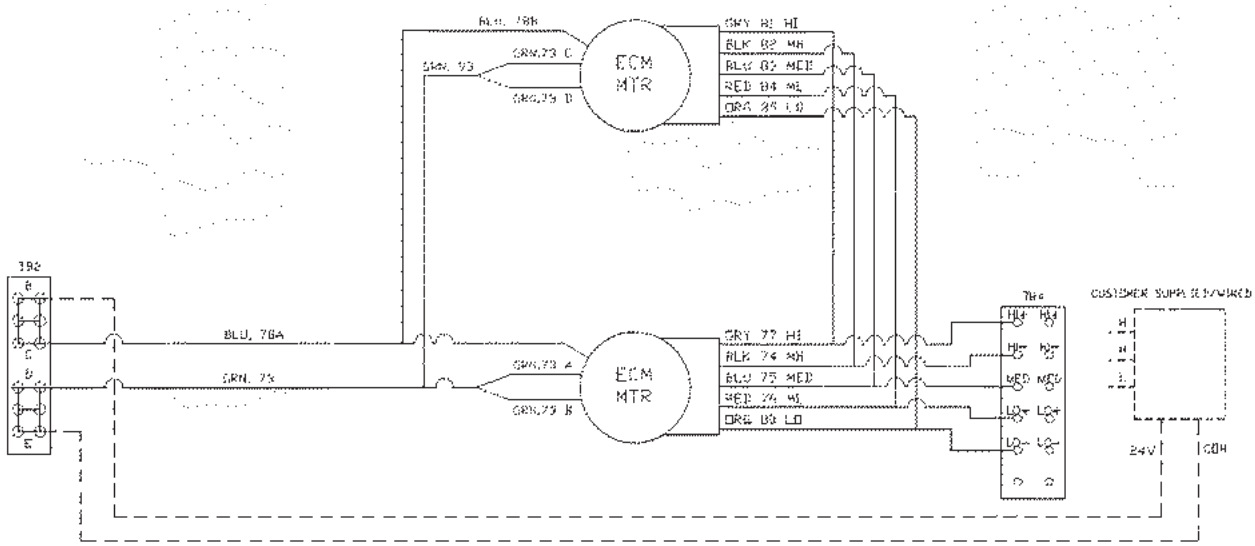

Table 1: Large Cap Wiring Schematics

Drawing Number	Description
910116769	ECM with 3 speed control, 115V, 1 Motor
910167425	ECM with 3 speed control, 115V, 2 Motors
910167454	ECM with 3 speed control, 208-230V, 1 Motor
910167432	ECM with 3 speed control, 208-230V, 2 Motors
910167455	ECM with 3 speed control, 265-277V, 1 Motor
910167433	ECM with 3 speed control, 265-277V, 2 Motors
910165943	ECM with EVO Board, 115V, 1 Motor
910166611	ECM with EVO Board, 115V, 2 Motors
910165944	ECM with EVO Board, 208-230V, 1 Motor
910166613	ECM with EVO Board, 208-230V, 2 Motors
910165945	ECM with EVO Board, 265-277V, 2 Motors

Figure 5: Single Motor EVO Board Bypass Wiring Detail for ThinLine Unit

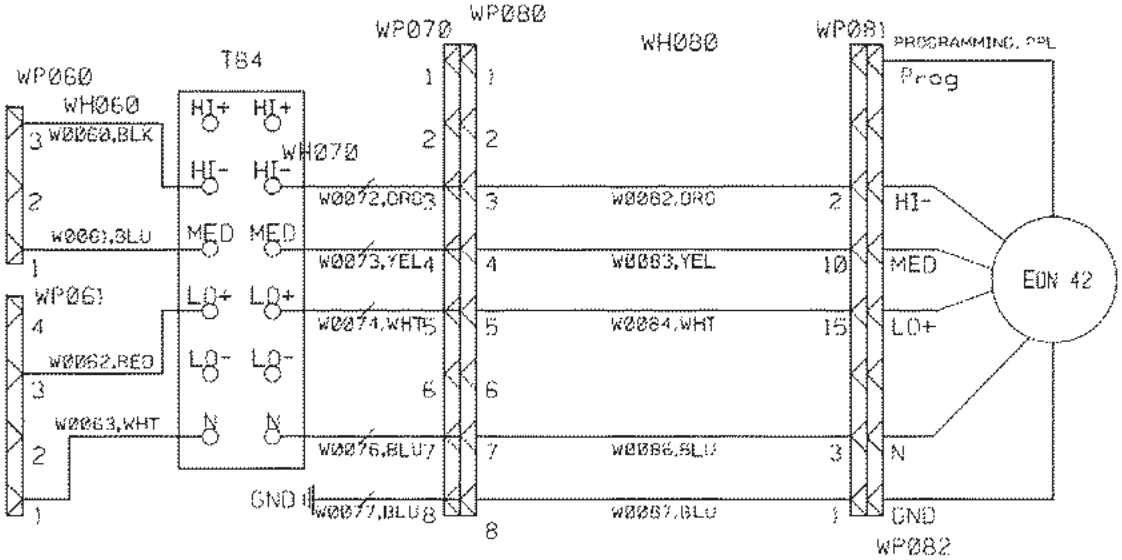

Figure 6: Two Motor EVO Board Bypass Wiring Detail for ThinLine Unit

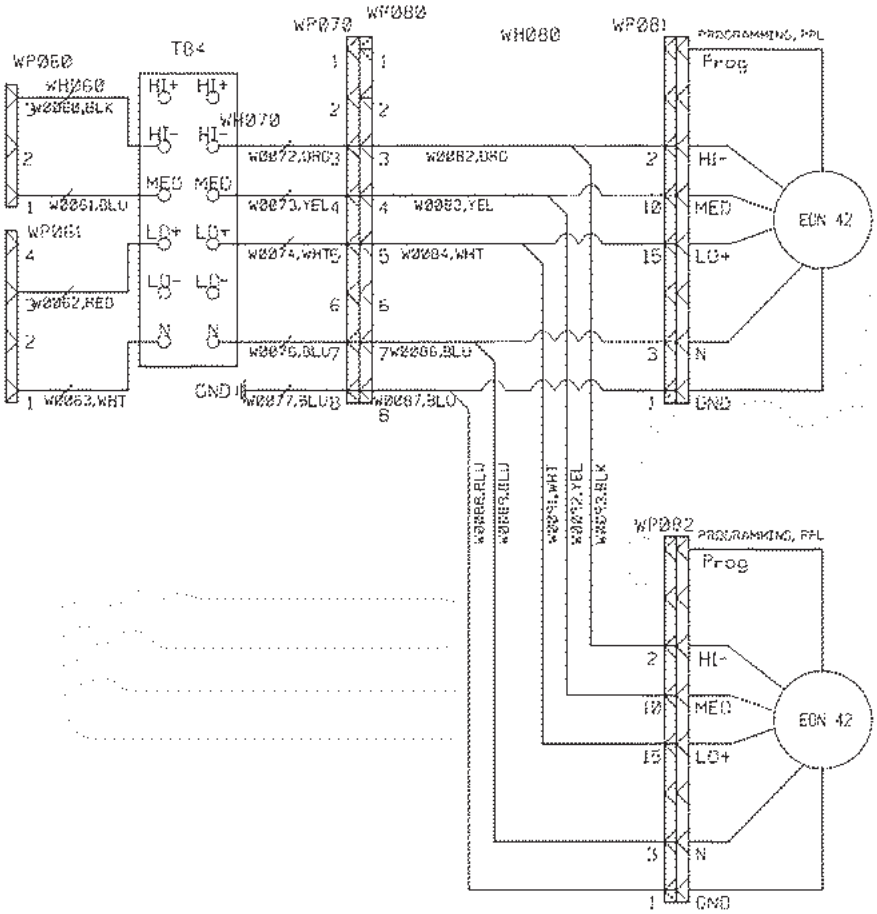

Figure 7: Standard 16 pin Wire Harness Detail

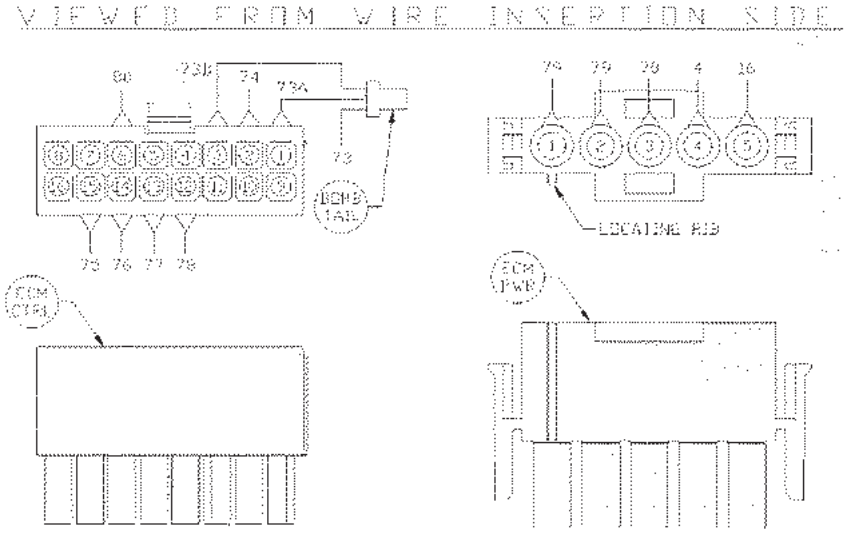

Figure 8: EVO Board 16 Pin Wire Harness Detail

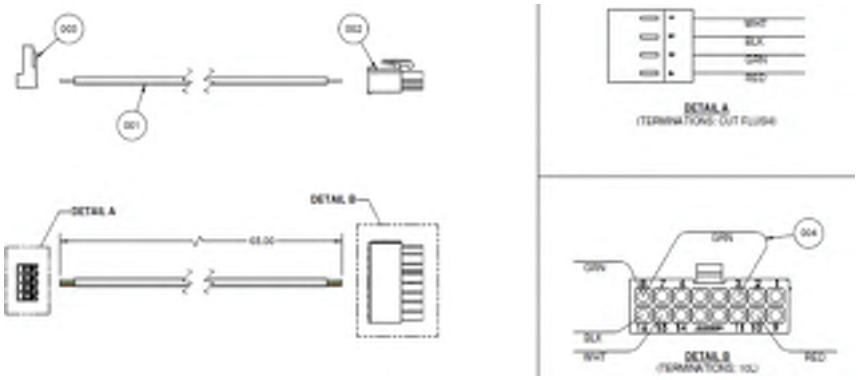

Table 2: Size 6 Voltage Table–Large Cap

Coil Configuration	Speed	Set Voltage* (VDC)	RPM*	CFM*
3	High	3.6	1033	591
	Medium	2.2	916	462
	Low	0.7	806	305
3 + 2	High	3.8	1184	596
	Medium	2.25	1040	470
	Low	0.75	881	293
6	High	3.75	1236	598
	Medium	2.2	1058	450
	Low	0.7	885	306
6 + 2	High	3.75	1369	590
	Medium	2.2	1158	447
	Low	0.7	946	312

* These values are all approximates and not exact

Table 3: Size 8 Voltage Table–Large Cap

Coil Configuration	Speed	Set Voltage* (VDC)	RPM*	CFM*
3	High	3.6	1068	797
	Medium	2.2	943	623
	Low	0.7	813	446
3 + 2	High	3.65	1206	799
	Medium	2.2	1050	625
	Low	0.75	888	447
6	High	3.65	1304	796
	Medium	2.2	1113	626
	Low	0.75	933	453
6 + 2	High	3.7	1400	798
	Medium	2.25	1202	626
	Low	0.8	988	440

* These values are all approximates and not exact

Table 4: Size 12 Voltage Table–Large Cap

Coil Configuration	Speed	Set Voltage* (VDC)	RPM*	CFM*
3	High	3.55	1160	1084
	Medium	1.94	993	800
	Low	0.37	909	503
3 + 2	High	3.71	1282	1082
	Medium	2.0	1105	799
	Low	0.41	996	501
6	High	3.55	1406	1078
	Medium	1.975	1164	802
	Low	0.37	1037	500
6 + 2	High	3.95	1512	1074
	Medium	2.03	1240	801
	Low	0.4	1104	498

* These values are all approximates and not exact

Table 5: Size 16 Voltage Table–Large Cap

Coil Configuration	Speed	Set Voltage* (VDC)	RPM*	CFM*
3	High	3.6	1076	1595
	Medium	2.1	921	1192
	Low	0.575	788	727
3 + 2	High	3.6	1231	1591
	Medium	2.1	1047	1195
	Low	0.575	851	715
6	High	3.42	1333	1593
	Medium	2.1	1108	1209
	Low	0.575	893	728
6 + 2	High	3.42	1473	1594
	Medium	2.1	1227	1202
	Low	0.575	956	727

* These values are all approximates and not exact

Table 6: Size 20 Voltage Table–Large Cap

Coil Configuration	Speed	Set Voltage* (VDC)	RPM*	CFM*
3	High	3.7	1114	1790
	Medium	2.65	1011	1488
	Low	0.7	923	800
3 + 2	High	3.6	1226	1814
	Medium	2.6	1148	1499
	Low	0.73	974	794
6	High	4.4	1370	1810
	Medium	3.35	1220	1502
	Low	0.3	1066	805
6 + 2	High	MAX VDC**	1423	1620
	Medium	3.4	1292	1492
	Low	0.55	1108	806

* These values are all approximates and not exact
** MAX VDC is referring to the dial being turned to its MAXIMUM voltage output

Table 7: Size 2 Voltage Table–ThinLine

Speed	Voltage*	CFM*
LOW	1.31 VDC	158 @ 0" WC
MED	1.95 VDC	228 @ 0" WC
HIGH	2.16 VDC	308 @ 0" WC

Table 8: Size 3 Voltage Table–ThinLine

Speed	Voltage*	CFM*
LOW	1.53 VDC	177 @ 0" WC
MED	2.11 VDC	265 @ 0" WC
HIGH	2.77 VDC	352 @ 0" WC

Table 9: Size 4 Voltage Table–ThinLine

Speed	Voltage*	CFM*
LOW	1.74 VDC	228 @ 0.05" WC
MED	2.46 VDC	337 @ 0.05" WC
HIGH	3.20 VDC	452 @ 0.05" WC

Table 10: Size 6 Voltage Table–ThinLine

Speed	Voltage*	CFM*
LOW	1.40 VDC	340 @ 0.1" WC
MED	2.1 VDC	522 @ 0.1" WC
HIGH	2.75 VDC	711 @ 0.1" WC

Table 11: Size 8 Voltage Table–ThinLine

Speed	Voltage*	CFM*
LOW	0.89 VDC	410 @ 0" WC
MED	2.77 VDC	627 @ 0" WC
HIGH	4.95 VDC	825 @ 0" WC

Table 12: Size 10 Voltage Table–ThinLine

Speed	Voltage*	CFM*
LOW	0.50 VDC	551 @ 0.05" WC
MED	2.55 VDC	825 @ 0" WC
HIGH	4.40 VDC	1105 @ 0" WC

Table 13: Size 12 Voltage Table–ThinLine

Speed	Voltage*	CFM*
LOW	0.47 VDC	719 @ 0" WC
MED	2.50 VDC	1010 @ 0" WC
HIGH	4.60 VDC	1344 @ 0" WC

* These values are all approximates and based on testing with the 3 row coil.

** MAX VDC is referring to the dial being turned to its MAXIMUM voltage output.

Daikin Applied Training and Development

Now that you have made an investment in modern, efficient Daikin equipment, its care should be a high priority. For training information on all Daikin HVAC products, please visit us at www.DaikinApplied.com and click on Training, or call 540-248-9646 and ask for the Training Department.

Warranty

All Daikin equipment is sold pursuant to its standard terms and conditions of sale, including Limited Product Warranty. Consult your local Daikin Applied representative for warranty details. To find your local Daikin Applied representative, go to www.DaikinApplied.com.

Aftermarket Services

To find your local parts office, visit www.DaikinApplied.com or call 800-37PARTS (800-377-2787). To find your local service office, visit www.DaikinApplied.com or call 800-432-1342.

This document contains the most current product information as of this printing. For the most up-to-date product information, please go to www.DaikinApplied.com.

Products manufactured in an ISO Certified Facility.

ED 19059-2 (10/15)

©2015 Daikin Applied | (800) 432–1342 | www.DaikinApplied.com

Daikin Applied Training and Development

Now that you have made an investment in modern, efficient Daikin equipment, its care should be a high priority. For training information on all Daikin HVAC products, please visit us at www.DaikinApplied.com and click on Training, or call 540-248-9646 and ask for the Training Department.

Warranty

All Daikin equipment is sold pursuant to its standard terms and conditions of sale, including Limited Product Warranty. Consult your local Daikin Applied representative for warranty details. Refer to Form 933-430285Y. To find your local Daikin Applied representative, go to www.DaikinApplied.com.

Aftermarket Services

To find your local parts office, visit www.DaikinApplied.com or call 800-37PARTS (800-377-2787). To find your local service office, visit www.DaikinApplied.com or call 800-432-1342.

This document contains the most current product information as of this printing. For the most up-to-date product information, please go to www.DaikinApplied.com.

Products manufactured in an ISO Certified Facility.

©2016 Daikin Applied | (800) 432–1342 | www.DaikinApplied.com

Installation and Maintenance	IM 1027
	Group: **Applied Systems**
	Part Number: 910102986
	Date: **October 2013**

ThinLine™ 3G Vertical Unit Heaters

Type FHVC, FHVH, FHVS, FHWC Vertical Design

200 to 1200 cfm

© 2013 Daikin Applied

Contents

General Information 3
Receiving and Storage 4
Pre-Installation 4
Fresh Air Box Openings 4
Recommended Maintenance Clearance 5
Duct Connections 5
Safety 5
Installation 6
Uncrating and Inspecting the Unit 6
Mounting Unit to Wall 6
Water Piping Connections 7
General Guidelines 7
Connecting to a Factory-Installed Valve & Piping Package 8
Field-Installed Valve & Piping 8
Shutoff/Balancing Valve 8
Systems with electric heat 8
Electrical Connections 8
Standard Electrical Connection 8
Thermostat and Controls 10
Initial Startup 10
Cleaning & Flushing the Water System 10
Operating Limits 11
Venting Hydronic Coils 11
. 11
Operation and Maintenance 12
Controls 12
Manual 4-Position Fan Switch 12
Unit-Mounted, Mechanical Thermostat With 4-Position Fan Switch 12
Digital Thermostats 12
DDC Interface Board 13
Accessories 14
Fresh Air Damper 14
Leveling Legs Option 14
Electric Heat Over-Temp Reset Button 15
General Maintenance 15
Filter Changes 15
Removing the fan & motor assembly 15
Physical Data 17
Unit Data 17
Unit Dimensions 18
Wiring Diagrams 22
Model Number Description 24

Thinline 3G vertical unit heaters are intended for use in single zone applications. They are available in sizes from 200 to 1200 cfm. Figure 2 describes the main features of these units and can be referred to for component placement. A variety of factory-built piping packages are available, either factory or field-installed.

Units are available with a variety of thermostat and fan speed control options, which can be mounted on the unit or shipped loose for mounting in the controlled space.

Options include:

- Four-position fan switch (Off/Lo/Med/Hi).
- Manual thermostat with on/off valve control.
- Digital thermostat with a variety of control options, including fan control and on/off or modulating valve control.
- DDC interface board for connecting the unit to controls provided by others. The controls interface option includes a 24 volt AC transformer and an interface terminal board.
- No controls, with pigtail connections to the unit's fan motor wiring harness.

Figure 1: Nomenclature (see Table 4, page 24 for complete model number description)

FH V S - 1 02 A

Unit Type
FH = Cabinet Unit Heater

Unit Configuration
V= Vertical
W = Wall Hung
I = Inverted Wall Hung

Cabinet Type
C = Cabinet (Flat Top)
S = Slope Top
H = Hideaway

Voltage
A = 115/60/1
E = 208-230/60/1
J = 265-277/60/1

Unit Size
02 = 200 CFM
03 = 300 CFM
04 = 400 CFM
06 = 600 CFM
08 = 800 CFM
10 = 1000 CFM
12 = 1200 CFM

Design Series

Figure 2: Unit Features

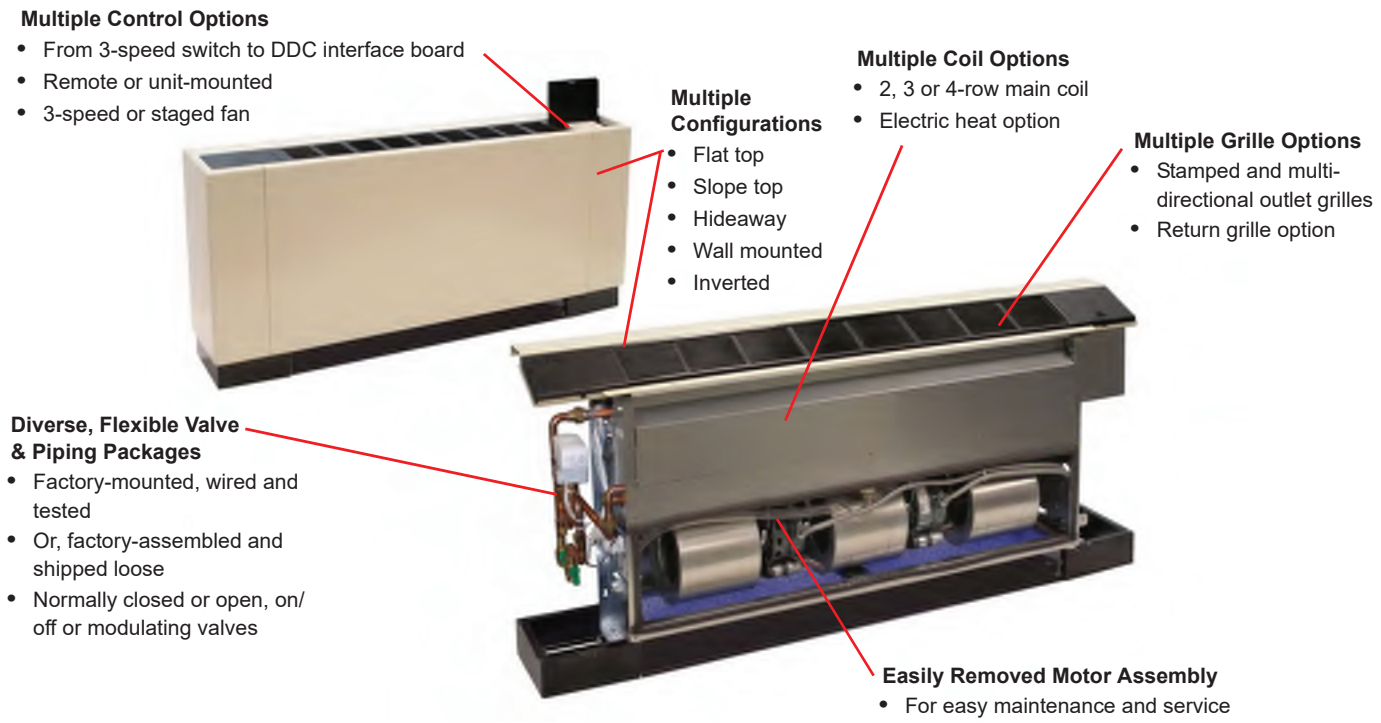

Receiving and Storage

Upon receipt of the equipment, check carton for visible damage. Make a notation on the shipper's delivery ticket before signing. If there is any evidence of rough handling, immediately open the cartons to check for concealed damage. If any damage is found, notify the carrier within 48 hours to establish your claim and request their inspection and a report. The Warranty Claims Department should then be contacted.

Do not stand or transport the machines on end. For storing, each carton is marked with "up" arrows.

Temporary storage at the job site must be indoor, completely sheltered from rain, snow, etc. High or low temperatures naturally associated with weather patterns will not harm the units. Excessively high temperatures, 140°F (60°C) and higher, may deteriorate certain plastic materials and cause permanent damage.

⚠ IMPORTANT

This product was carefully packed and thoroughly inspected before leaving the factory. Responsibility for its safe delivery was assumed by the carrier upon acceptance of the shipment. Claims for loss or damage sustained in transit must therefore be made upon the carrier as follows:

VISIBLE LOSS OR DAMAGE

Any external evidence of loss or damage must be noted on the freight bill or carrier's receipt, and signed by the carrier's agent. Failure to adequately describe such external evidence of loss or damage may result in the carrier's refusal to honor a damage claim. The form required to file such a claim will be supplied by the carrier.

CONCEALED LOSS OR DAMAGE

Concealed loss or damage means loss or damage which does not become apparent until the product has been unpacked. The contents may be damaged in transit due to rough handling even though the carton may not show external damages. When the damage is discovered upon unpacking, make a written request for inspection by the carrier's agent within fifteen (15) days of the delivery date and file a claim with the carrier.

Pre-Installation

Before beginning installation, please read this publication in its entirety. Directions given in this bulletin for right and left sides or coil hand assume a position facing the front of the unit.

1. To prevent damage, do not operate this equipment for supplementary heating during the construction period. Doing so will void the warranty.
2. Inspect the carton for any specific tagging numbers indicated by the factory per a request from the installing contractor. At this time the voltage, phase and capacity should be checked against the plans.
3. Check the packing list and unit identification/tagging numbers against the plans to verify that the unit is being installed in the correct location. The unit data plate is attached to the deck plate on the front of the unit heater (see Figure 3). Remove the front panel on cabinet units to access it. The panel contains specific information on standard components as listed in Figure 1, page 3 and in Table 7, page 26.

Figure 3: Data Plate Location

4. Before installation, check the available dimensions where the unit is to be installed versus the dimensions of the unit.
5. Note the location and routing of water piping, condensate drain piping, and electrical wiring. The locations of these items are clearly marked on submittal drawings.
6. The installing contractor will find it beneficial to confer with piping, sheet metal, and electrical foremen before installing any unit.

Note: Check the unit data plate for correct voltage with the plans before installing the equipment. Also, make sure all electrical ground connections are made in accordance with local code.

7. The unit is not designed to be free-standing. Install it against a wall or other flat surface that meets fire and electrical codes requirements for heating and cooling devices.
8. After installation, cover the unit with the shipping carton or other appropriate material for protection during finishing of the building. This is critical while spraying fireproofing material on bar joists, sandblasting, spray painting and plastering. Damage to the unit due to a failure to protect it during finishing of the building is not covered by the warranty.

Fresh Air Box Openings

Thinline vertical unit heaters can be installed with an optional fresh air box that is designed to let in outside air while preventing water (such as rain) from getting into the unit itself. If used, prior to unit installation, be sure that the exterior wall opening and the wall box are ready and installed in accordance with the job plans.

Recommended Maintenance Clearance

Cabinet units have removable front and side panels for easy access to components for service and maintenance. The fan assembly is easily removed from the front for cleaning. See General Maintenance, page 15 for more information.

Figure 4 shows recommended maintenance clearances: 0.5 inches (13 mm) on either side and 10 inches (254 mm) in front. Units are referred to as either right-hand or left-hand depending upon the piping connection. Hand is designated by facing the front of the unit (airflow discharges from the front or top). Unless it is a special-order unit, the control panel is always on the end opposite the coil pipe connections.

Figure 4: Recommended maintenance clearance

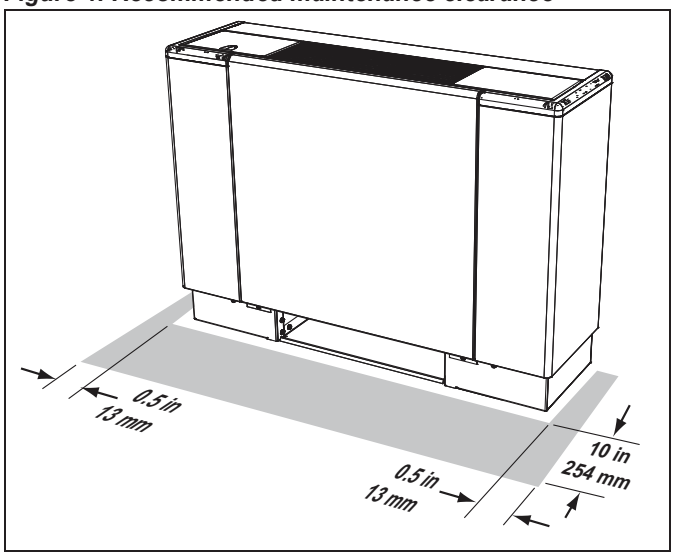

Duct Connections

Air ducts, when used with hideaway units, should be installed in accordance with local and national codes, including National Fire Protection Association standards for the Installation of Air Conditioning and Ventilating Systems and the National Fire Protection Association standards for the Installation of Air Conditioning and Ventilation Systems other than Residence Type.

A one-inch duct collar is provided on units with a ducted return and/or discharge to attach ductwork. Daikin recommends using galvanized sheet metal ductwork. Slide the sheet metal duct over the duct collar flange of the unit, seal the joint and fasten with sheet metal screws.

Note: Do not run screws through the removable front panel on hideaway units.

Ductwork Recommendations

Follow the general recommendations listed below when installing the ductwork for the unit.

1. Discharge ductwork should run in a straight line, unchanged in size or direction, for a minimum distance of three fan diameters from the unit (approximately 20 inches).
2. Avoid making sharp turns when making duct turns and transitions. Use proportional splits, turning vanes, and air scoops when necessary.
3. When possible, construct and orient supply ductwork turns in the same direction as the fan rotation.

Safety

Follow all safety codes. Wear safety glasses and work gloves. Use a quenching cloth for brazing operations. Have a fire extinguisher available. Follow all warnings and cautions in these instructions and attached to the unit. Consult applicable local building codes and National Electrical Codes (NEC) for special requirements.

Recognize safety information. When you see a safety symbol on the unit or in these instructions, be alert to the potential for personal injury. Understand the meanings of the words DANGER, WARNING, and CAUTION. DANGER identifies the most serious hazards that will result in death or severe personal injury; WARNING means the hazards can result in death or severe personal injury; CAUTION identifies unsafe practices that can result in personal injury or product and property damage. Improper installation, adjustment, service, maintenance, or use can cause explosion, fire, electrical shock, or other conditions which may result in personal injury or property damage. This product must be installed only by personnel with the training, experience, skills, and applicable licensing that makes him/her “a qualified professional HVACR installer.”

⚠ DANGER

Disconnect all electrical power before servicing unit. Electrical shock will cause severe injury or death.

⚠ WARNING

Hazardous Voltage!
Use copper conductors only. Unit terminals are not designed to accept other types of conductors. Failure to do so may cause damage to the equipment.

⚠ WARNING

Personal injury hazard. Wear protective gloves to avoid possible cuts and abrasions from exposed edges. Avoid contact with sharp edges.

⚠ CAUTION

Cleaning agents may cause serious damage to internal components, such as aluminum coils and electronic controls, etc. Do not operate unit heater while building maintenance cleaning agents are in use.

Uncrating and Inspecting the Unit

1. Carefully remove the packaging, remaining alert to any signs of shipping damage. Be careful not to discard components that may be included with the packaging.
2. If the unit is damaged, file a claim with the carrier. Notify the local Daikin representative immediately.
3. You may want to retain some or all of the packaging to provide jobsite unit location information and temporary protection for the unit heater after installation. Be sure to dispose of plastic packaging and protective cardboard properly, in accordance with local recycling rules and guidelines.

⚠ WARNING

Plastic packaging is a suffocation hazard, dispose of properly. Keep away from children.

4. Touch up painted panels if necessary. If panels need paint, sanding is not necessary. However, clean the surface of any oil, grease, or dirt residue so the paint will adhere. Purchase factory approved touch up paint from your Daikin representative or Daikin Factory Service.

Mounting Unit to Wall

⚠ WARNING

Installation and maintenance are to be performed by qualified personnel who are familiar with local codes and Regulations, and experienced with this type of equipment.

⚠ CAUTION

Personal injury hazard. Wear protective gloves to avoid possible cuts and abrasions from exposed edges. Avoid contact with sharp edges.

1. Consult job blueprints for unit location.
2. Clean area where unit is to be installed, removing all construction dirt and debris. Remove any mouldings at the floor or wall.
3. Remove the unit from the shipping carton and plastic covering. Save the carton and plastic to use as a protective cover after the installation is complete.
4. On cabinet units, remove the screws shown in Figure 5 that secure the right and left cabinet corner panels to the subbase. For ease of installation, you may also remove the center panel. Lift the panels up and out.

Note: Set the unit panels aside where they will not be damaged. Take care not to bend the mounting tabs on the bottom of the panels.

Figure 5: Cabinet Side Panel Removal

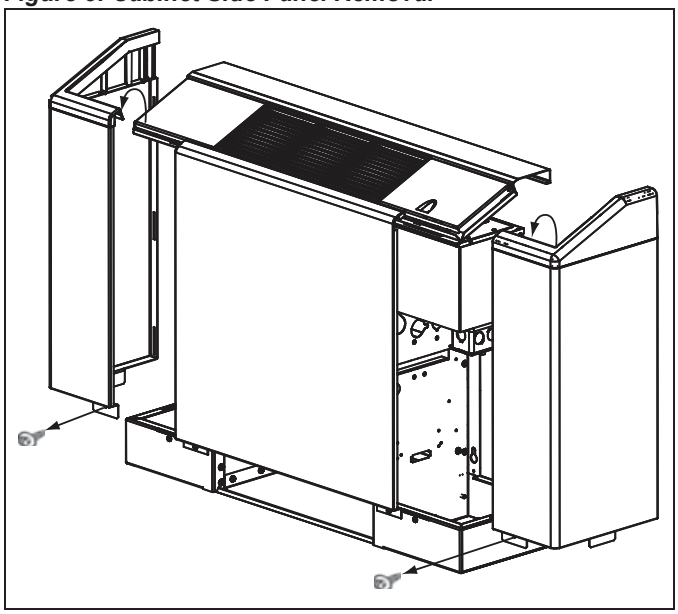

5. STOP! If an outside air damper kit is to be installed, install it now. See Figure 17, page 14 and the IM included with the damper for more information.
6. Position the chassis/subbase against the wall where the unit is to be installed. Make sure that the area under the unit is free of combustible materials such as carpet. For cabinet units, the wall must act to close off the back of the unit.
7. For hideaway units, if you are using McQuay's decorative wall plate, use blocks or other suitable material to raise the unit off the floor a minimum of 1.5 inches (38 mm).
8. Make sure electrical and piping connections are in the proper location within the end compartments. The control box is in the end compartment opposite the main coil piping connections. Power to the unit is hooked up through the junction box/disconnect box located under the control box. See Figure 23, page 18 through Figure 26, page 21 for location information.
9. Use a level to check that the unit is level both front to back and side to side (see Figure 6). Adjust the unit as needed using the optional leveling legs or shims.
10. The chassis has a series of slots on the back flange to mount the assembly to the wall. Transfer a mark with a marker or pencil to the wall at the mounting hole locations.
11. Insert fasteners through the mounting holes in the chassis and secure the unit to the wall. Do not over-tighten fasteners. It is the installing contractor's responsibility to select the correct fasteners for each unit to meet local codes. At location(s) where no stud is present, secure with a Toggle bolt or equivalent.

Note: Use a minimum of two fasteners on each side to secure the unit (field supplied).

12 On cabinet units, reinstall the side/quarter panels in reverse order as performed in step 4.

13 If you raised the unit off the floor in step 7, remove the block or other material supporting the bottom of the unit. Make sure the unit is securely fastened to and supported by the wall mounts.

14 Cut out one side and the bottom of the shipping carton, leaving the top and three sides to place over the unit for protection during construction.

Figure 6: Unit Mounting

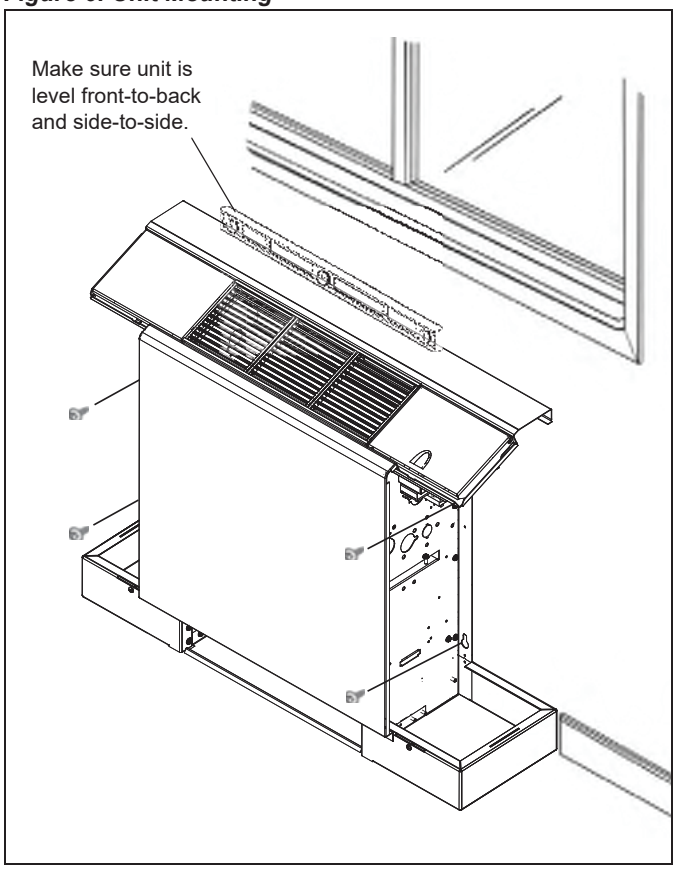

Water Piping Connections

General Guidelines

1 Piping can be steel, copper or PVC, but must comply with local codes.

2 Proper ventilation is required for soldering. When soldering, use a quenching cloth to protect unit heater components from overheating damage—melting insulation, also damage to valves, wiring, electronics, sensors, etc. See Figure 7. When Daikin provides valve packages with unions, o-rings are included. When soldering near unions, remove the o-rings before heating.

Figure 7: Protect Components From Overheating

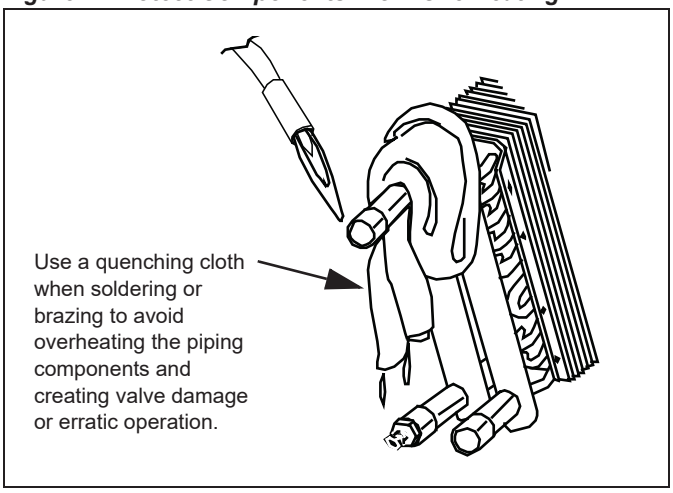

3 If sealant compound is not provided for flexible hose fittings, apply Teflon tape to the connections to help prevent leaks.

4 Ensure proper insulation of supply and return piping. Proper insulation prevents loss of unit heater capacity and overheating of end compartments.

5 The piping to and from the unit must be protected from outside air and freeze conditions. It must be suitably insulated for condensation and for heat loss or gain. Penetrations entering the unit end compartments must be fitted/sealed for unit integrity.

6 Supply and return shutoff valves are recommended at each unit. The return valve is used for balancing and should have a “memory stop” so that it can always be closed off, but can only be re-opened to the proper position for the flow required.

7 Be sure to install control valves on the correct unit heater. Indiscriminate mixing of valves in the field can result in valves improperly sized for the desired flow rate, which can result in poor operation.

8 Install control valves so there is at least 2" (51mm) minimum clearance to remove the actuator from the valve body.

9 Do not connect a unit to the supply and return piping until the water system has been cleaned and flushed completely. After this is done, the initial connection should have all valves wide open in preparation for water system flushing.

10 Automatic flow control devices must not be installed prior to system cleaning and flushing.

11 Check local code for any requirement for electrical fittings.

Connecting to a Factory-Installed Valve & Piping Package

To view connection locations for factory-installed valve & piping packages, see Figure 8. Before installing supply and return lines to a factory piping package, review the following items.

- All piping connections are 5/8" O.D.S. (1/2" nominal) female copper connections.
- The installer must provide adequate piping system filtration and water treatment.
- Daikin deluxe and premium piping packages include a strainer which prevents debris from entering the coil. Clean the strainer regularly.
- The unit heater ships with brackets to adequately support the piping package during shipment. Remove these brackets before connecting water piping to the unit.
- Set end valves to the fully open position to prevent damage to the valve seat during brazing.
- Solder water piping connections to supply and return end connections. Avoid overheating factory soldered joints to prevent the possibility of leakage.

Figure 8: Hook Up Locations: Factory-installed Packages

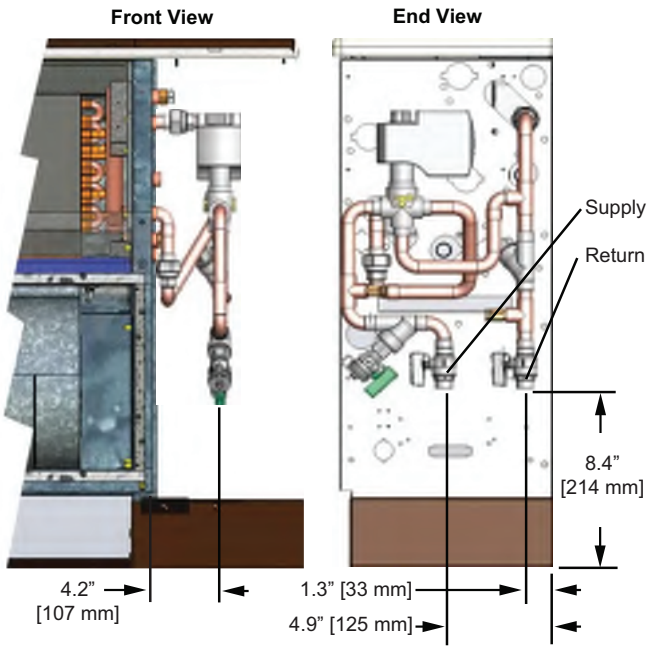

Note: RIght-hand connections shown. Left-hand connection distances are the same.

Distances to connections from chassis are from unit mounting holes. Distances may vary slightly from given values.

Field-Installed Valve & Piping

Review General Guidelines, page 7 before beginning. Slide ½" copper tubing or connection couplings (installer provided) onto the coil connections. Solder the joint using a good-quality, lead-free solder to provide a watertight connection.

⚠ WARNING

Avoid overheating when soldering field connections to the coil to prevent leakage, overheating of the copper tubes, and melting of valves, factory-soldered joints or component gasketing. A quenching cloth is recommended. See Figure 7.

Shutoff/Balancing Valve

Each unit heater should be at least equipped with shutoff valves on both the supply and return lines for easy serviceability and removal if it becomes necessary. We suggest using our combination shutoff/balancing valves between the main supply line and the unit heater unit. These can be furnished as part of a factory-installed valve and piping package or they can be installed in the field. The balancing valve installed on the return line is used to adjust the water flow to provide the best performance.

Systems with electric heat

The electric heating coil is designed to be used only when the hot water heat is turned off for the season. To protect the electric heat elements, an automatic and manual electric heat switch disengages the electric heat to prevent overheating. For information on resetting the manual switch, see Electric Heat Over-Temp Reset Button, page 15.

Electrical Connections

Installation and maintenance must be performed only by qualified personnel who are familiar with local codes and regulations, and are experienced with this type of equipment.

⚠ DANGER

Hazardous Voltage!

The installer must determine and follow all applicable codes and regulations. This equipment presents hazards of electricity, rotating parts, sharp edges, heat and weight. Failure to read and follow instructions can result in property damage, severe personal injury or death.

Standard Electrical Connection

Field electrical power connections are made in the electrical junction box, which is mounted to the control box on the side of the chassis opposite the coil piping connections. See Figure 9. If the unit is equipped with an optional disconnect switch, it is located in this junction box.

Units with an electric heat option that has the same voltage as the unit can bring the power conductors into this same junction box. Units with electric heat that has a different voltage should bring the electric heat into one of the knockouts on the control box. See Figure 9.

Low voltage wires should be brought into the conduit located next to the field electrical power junction box. See Figure 9.

Figure 9: Electrical Power Connections

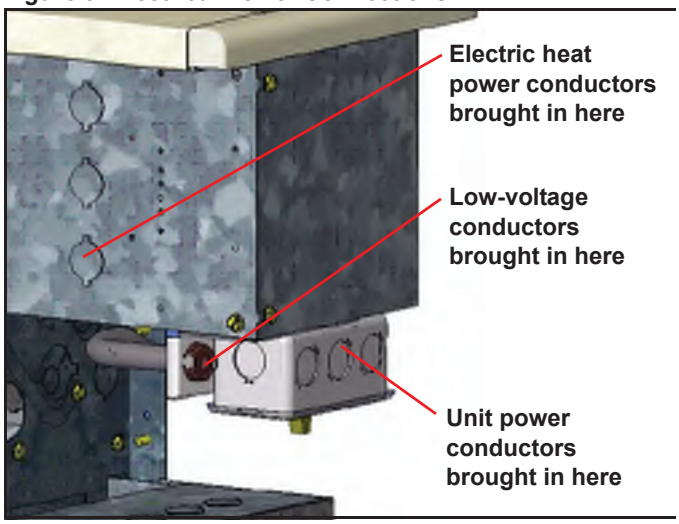

If electrical wiring or conduit comes through the floor, all wires or conduit should be sealed at this point.

Note: Wiring coming through the wall should be sealed to stop cold air infiltration through the wall cavity, which could affect unit thermostat operation. Wiring coming through the floor should be sealed to prevent water leakage from reaching live wires.

Install a strain relief and pass the wires through the strain relief into the junction box. Make the connections and reinstall the junction box cover.

Electrical Data

The wiring diagram for the unit is attached to the inside of the corner panel on cabinet units. It is attached to the front cover of the unit on hideaway units. See Figure 9. Be sure the available power is the same voltage and phase as that shown on the unit serial plate. See Figure 3, page 4 for the location of the serial plate.

Line and voltage wiring must be done in accordance with local codes or the National Electrical Code, whichever is applicable.

Apply correct line voltage to the unit. Power to the unit must be sized correctly. Branch circuit overcurrent protection must be provided per local codes. See the nameplate for correct ratings.

All 208-230V single-phase units are factory wired for 230 volt operation. For 208 V operation the L1 wire connection to the unit transformer (found in the main control box) must be changed. The L1 wire must be disconnected from the 230 V (orange) wire and connected to the 208 V (red) wire. The 230 V wire must then be capped off via a wire nut or male terminal as appropriate. Please refer to the unit wiring diagram.

Operating Voltages

Operating voltages are as follows, plus or minus 10%.

- 115/60/1
- 208-230/60/1
- 265-277/60/1

Note: Voltages listed are to show voltage range. However, units operating with overvoltage and undervoltage for extended periods of time will experience premature component failure.

Figure 10: Wiring Diagram Locations

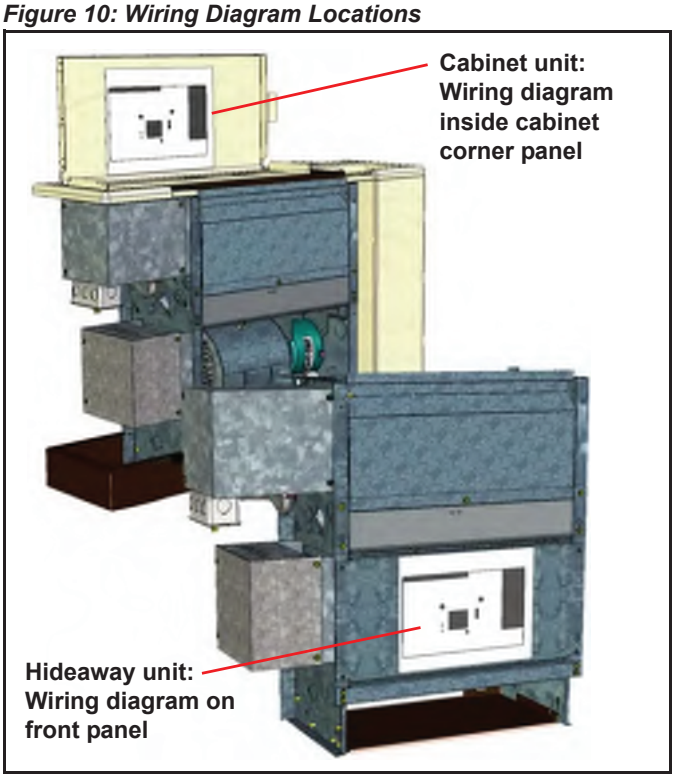

Thermostat and Controls

⚠ DANGER

READ THE INSTRUCTIONS INCLUDED WITH THE THERMOSTAT/CONTROL CAREFULLY BEFORE ATTEMPTING TO INSTALL, OPERATE OR SERVICE IT.

Failure to observe safety information and comply with instructions could result in PERSONAL INJURY, DEATH AND/ OR PROPERTY DAMAGE.

To avoid electrical shock or damage to equipment, disconnect power before installing or servicing. Use only wiring with insulation rated for full thermostat operating voltage. Use copper wire only. Insulate or wirenut all un-used leads. Any wiring, including the remote probe,may carry the full operating voltage of the thermostat.

To avoid potential fire and/ or explosion do not use in potentially flammable or explosive atmospheres.

Retain the installation instructions for future reference. You must review your application and national and local codes to ensure that your installation will be functional and safe.

After wiring and installation are complete, energize the system and check the operation. Adjust the thermostat as necessary to complete at least one cycle. Be sure the thermostat and all other equipment are functioning correctly.

Initial Startup

Cleaning & Flushing the Water System

1. Prior to first operation of any unit, clean and flush the water circulating system of all construction dirt and debris.
2. If units are equipped with water shutoff valves, either electric or pressure operated, connect the supply and return runouts together at each unit location. This will prevent the introduction of dirt into the unit. See Figure 11.

Figure 11: Connections for flushing system piping

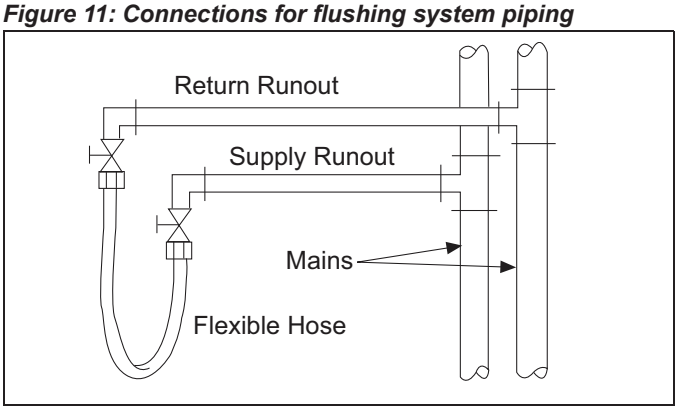

3. Fill the system at the city water makeup connection with all air vents open. After filling, close all air vents.
4. Start the main circulator with the pressure reducing valve open.
5. Check vents in sequence to bleed off any trapped air, ensuring circulation through all components of the system.
6. While circulating water, check and repair any leaks in the unit and surrounding piping.

⚠ CAUTION

Units must be checked for water leaks upon initial water system startup. Water leaks may be a result of mishandling or damage during shipping. Failure by the installing contractor to check for leaks upon start-up of the water system could result in property damage

7. Drains at the lowest point(s) in the system should be opened for initial flush and blow-down, making sure city water fill valves are set to make up water at the same rate.
8. Check the pressure gauge at pump suction and manually adjust the makeup to hold the same positive steady pressure both before and after opening the drain valves.
9. Flush should continue for at least two hours or longer until the drain water is clean and clear.
10. Shut off the circulator pump and open all drains and vents to completely drain down the system.
11. Short-circuited supply and return run outs should now be connected to the unit supply and return connections. Do not use sealers at the swivel flare connections of hoses.
12. Refill the system with clean water.
13. Test the water using litmus paper for acidity, and treat as required to leave the water slightly alkaline (pH 7.5 to 8.5).
14. Antifreeze may also be added at this time. Use commercial grade antifreeze designed for HVAC systems only. Do not use automotive grade antifreeze. Antifreeze will have an effect on the performance of the unit.
15. Once the system has been filled with clean water and antifreeze (if used), precautions should be taken to protect the system from dirty water conditions.

⚠ IMPORTANT

It is McQuay's policy not to make recommendations on water treatment. It is the responsibility of the user to check that the water supply to the units is free of contaminants or corrosive agents, chemicals or minerals. The general contractor or owner should contact a local water treatment company regarding water treatment. A fouled water system will lead to premature component failure.

Operating Limits

This equipment is designed for indoor installation only. Sheltered locations such as attics, garages, etc., generally will not provide sufficient protection against extremes in temperature and/or humidity, and equipment performance, reliability, and service life may be adversely affected.

Venting Hydronic Coils

Hydronic coils require a vent, either manual or automatic, to release air from the unit. Coils on all Thinline unit heaters come standard with a coil air vent. It is located on the piping side of the unit, above the coil connections.

Perform the following steps to vent both primary and secondary coils after installing the unit.

1. Pressurize the building piping system with water and vent any trapped air at system vents.
2. For units with manual air vents, back the set screw out to expel air from the unit and then re-tighten the set screw.
3. Automatic air vents should require no adjustment for the coil to vent. However, if the coil does not vent immediately, unscrew the outer portion of the fitting to expel air from the port. If debris has become trapped in the vent, completely remove the outer portion of the fitting and clean.

Controls

A wide variety of control options are available for Thinline 3G unit heaters, both unit-mounted and remote-mounted. This section provides a brief overview of these options and their operation. For more complete information, contact your Daikin representative or the installation manual that came with the control.

Manual 4-Position Fan Switch

This four-position fan switch (Off, High, Med, Low) option is available unit or remote-mounted (wall-mounted version picture to right). The unit-mounted option operates on line voltage. The remote-mounted option operates on low-voltage power and may have been provided with a factory-mounted, low-voltage interface board, which contains 3-24 volt relays with line voltage contactors and terminal connections. The transformer is factory-installed and wired.

Sequence of operation

- *Off:* Fan is turned off. The motorized fresh-air damper, when supplied, is closed (see Fresh Air Damper, page 14).
- *High, Medium, Low:* Fan runs continuously at the selected speed. The two-position, motorized fresh-air damper, when supplied, is opened.

Unit-Mounted, Mechanical Thermostat With 4-Position Fan Switch

This unit-mounted option combines the four-position fan switch described above with a mechanical thermostat. Sequence of operation

- Fan Switch
  - *Off:* Fan is turned off. The two-position, motorized fresh-air damper, when supplied, is closed (see Fresh Air Damper, page 14).
  - *High, Medium, Low:* Fan runs continuously at the selected speed. The two-position, motorized fresh-air damper, when supplied, is opened.
- Thermostat
  - Cycles the valve(s) open or closed on demand based on occupant-desired level.

Digital Thermostats

Daikin offers a broad range of unit-mounted and remote, wall-mounted digital thermostats with the capability to control on-off, 3-wire and proportional modulating valves, and normally closed or normally open actuator valves. For more information, refer to the Daikin publication ED 18513.

MT155 Thermostat

The MT155 series thermostat provides on-off control for low-voltage or line-voltage valves and fan motors. This unit is designed for remote-mounting with connection to the DDC interface board which is mounted on the unit. Options three-speed fan control for continuous or cycling fan operation.

Figure 12: MT155 Thermostats

Three standard control options are available:

- *On-off fan cycle operation:* The thermostat cycles the fan from the manually selected fan speed (high, medium or low) to off.
- *Continuous fan and on-off valve cycle operation:* The thermostat cycles the valves on and off. The fan runs continuously at the manually selected fan speed.
- *On-off fan and on-off valve cycle operation:* The thermostat cycles the fan from the manually selected fan speed to off and it cycles the valves on and off.

When the system switch is in the off position, the unit heater system including the fan is shut off.

MT158 and MT168 Thermostat-Controllers with Digital Display

Series MT158 and MT168 microprocessor-based thermostat-controllers combine a proportional integral control algorithm with adaptive logic. They may be unit-mounted or remote-wall mounted.

Figure 13: MT158 and MT168 Thermostats

Heating outputs for the MT158 are individually configurable for three-wire floating control valves or on/off valves in the normally open or normally closed modes.

Heating outputs for the MT168 provide 0-10 Vdc or 4-20 mA The integrated, three-speed fan control switch is line voltage to allow direct connection to the fan motors. Manual or automatic changeover is provided with remote setback capability from a time clock or facility management system. Features include a Fahrenheit or Celsius digital display.

Two standard control options are available:

- *Continuous fan and modulating (or on-off) valve operation:* The fan runs continuously at the manually selected fan speed (high, medium or low). The controller modulates the valves or, on the MT158, dip-switches can be set to cycle the valves on and off.
- *On-off fan cycle operation and modulating (or on-off) valve operation:* The controller cycles the fan from the manually selected fan speed to off. The controller modulates the valves or, on the MT158, dip-switches can be set to cycle the valves on and off.

DDC Interface Board

The low-voltage, DDC interface board is used with any remote (wall mounted) Daikin thermostat or control. It can also be used with a building automation system (BAS) control where low voltage is needed to operate the unit heater. It is located in the control box for the unit (see Figure 9, page 9).

The DDC interface board includes:

- Three 24-volt relays with line-voltage contactors to operate the fan motor speeds.
- Terminal connections for interfacing to:
  - An optional remote-mounted thermostat.
  - Low-voltage, on-off valve actuators.
  - A return air sensor.
- A factory-wired and installed transformer.

See Figure 14 for a list of connecting points to the board. For additional wiring information, see the typical wiring diagram Figure 28 or the unit's wiring diagram, which is attached to the corner panel on cabinet units and to the chassis front cover on hideaway units. (see Figure 10, page 9).

Figure 14: DDC Interface Board 24 VAC connections

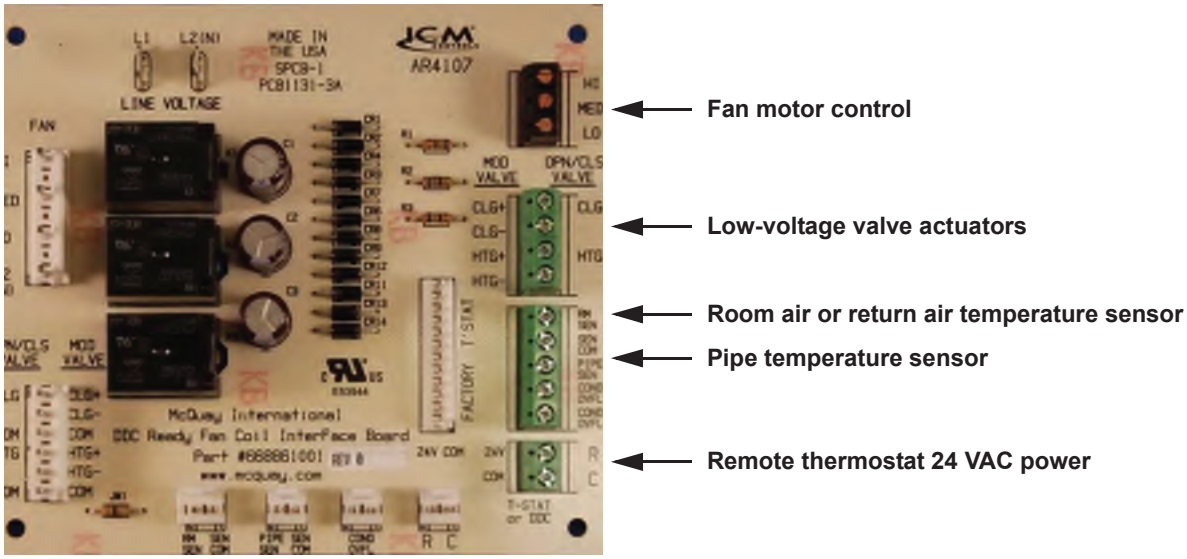

Accessories

Fresh Air Damper

The fresh air damper kit provides up to 25% outside air to the fan coil. It consists of an intake with damper blade and insect screen. The damper may be manually controlled through the return air opening or with an optional field-installed damper motor. For installation information, see Daikin installation manual IM 1023 which is supplied with the damper kit.

Operation

To open the damper, reach under the unit and pull the damper handle toward you. To close, push the damper away from you. See Figure 15.

Figure 15: Opening and Closing the Damper

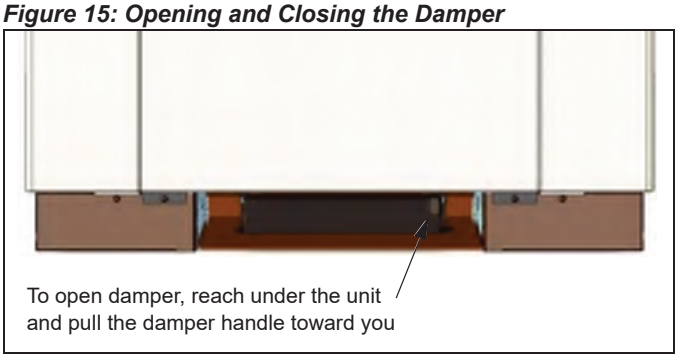

If the damper is difficult to open or moves too freely, you can adjust the tension by tightening or loosening the nuts on its pivot axis. See Figure 16.

Figure 16: Adjusting Damper Tension

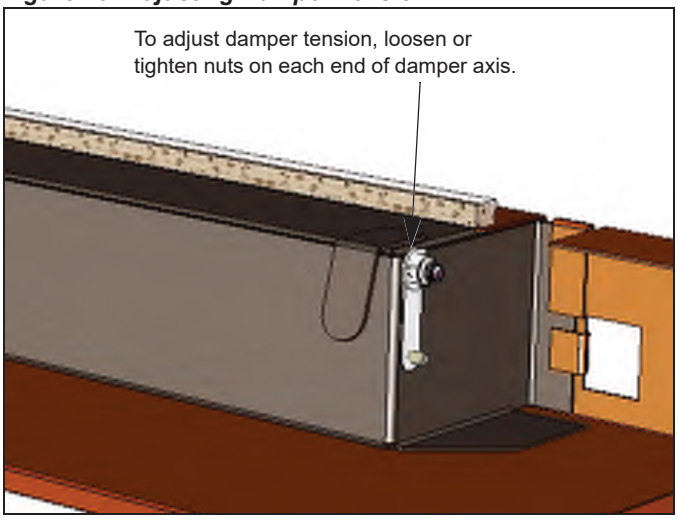

Cold Weather Operation

Fan coils may experience erratic operation during cold ambient conditions with the outside air damper in the open position.

Fresh Air Damper Motor Kit

This damper motor kit is for field installation with the fresh air damper kit. The damper kit must be ordered separately. For installation information, see Daikin installation manual IM 1028, which is supplied with the damper motor kit. Under most control schemes, the damper motor is set up to open the damper automatically whenever the unit fan is in operation.

Figure 17: Damper Motor Kit Installed in Unit

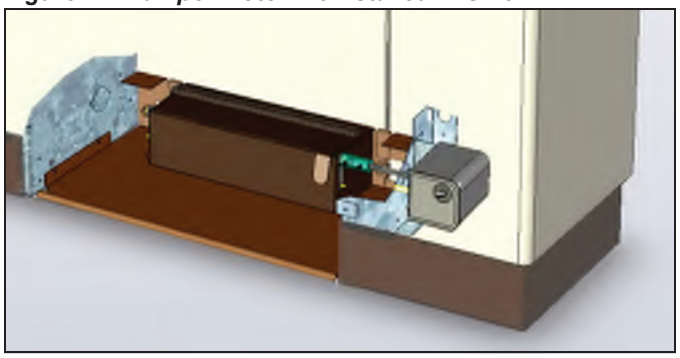

Leveling Legs Option

Field or factory-installed kits are available with 0” to 1" adjustment for positive leveling of floor-mounted units.

Height Adjustment

To adjust the height of a leveling leg:

1. Loosen the locking nut on the leveling leg bolt with a 9/16-inch wrench.
2. Turn the leveling leg bolt clockwise to lower the unit or counterclockwise to raise it.
3. When you are finished adjusting the height, hold the leveling leg bolt in place and draw the locking nut up tight against the mounting bracket.

Figure 18: Leveling Legs Adjustment

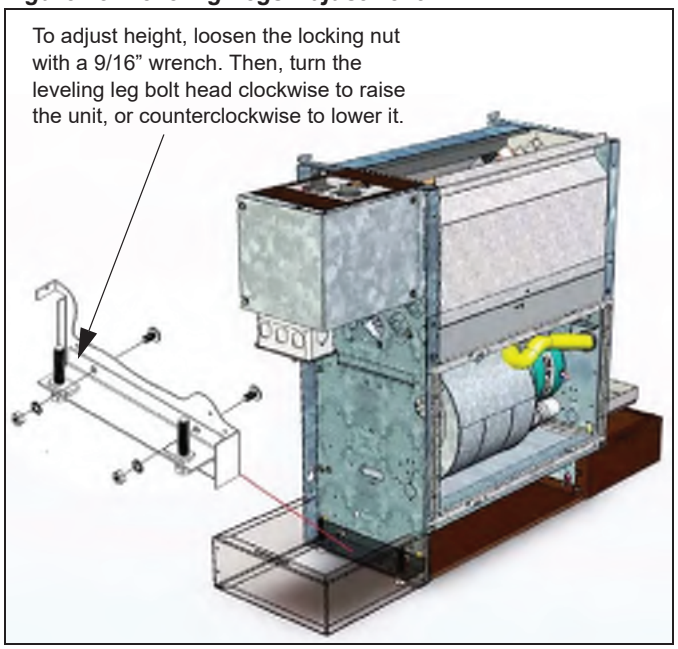

Electric Heat Over-Temp Reset Button

The electric heat options comes with two over-temperature switches. The first resets automatically when the over-temperature condition no longer exists. The second, backup switch must be reset manually.

Note: The need to reset the manual switch may indicate that there are improperly functioning system components. If the switch trips again, contact Daikin Factory Service for help in diagnosing the cause.

To reset the manual switch, carry out the following steps:

1. Disconnect all power to the unit. Verify the power has been disconnected.

⚠ DANGER

Personal Injury Hazard.

Power supply can cause electrical shock. Always disconnect power to unit before servicing.

2. Remove the main drain pan and motor assembly from the unit (see Removing the fan & motor assembly, page 15).
3. Access and push in the red reset button. See Figure 19.

Figure 19: Electric Heat Over-Temp Reset Button Location

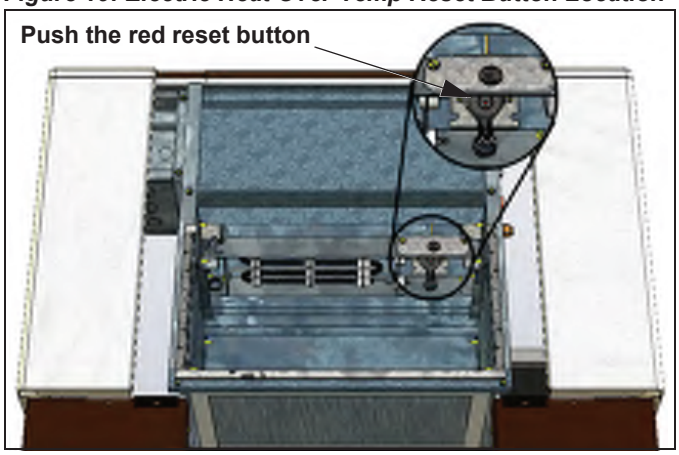

4. Reinstall the drain pan and motor assembly.
5. Reconnect the power.

General Maintenance

Normal maintenance on all units is generally limited to filter changes and cleaning the condensate drain pans. Units are provided with permanently lubricated motors and require no oiling even though oil caps may be provided.

Record performance measurements of volts, amps, and water temperature differences (both heating and cooling). A comparison of logged data with start-up and other annual data is useful as an indicator of general equipment condition.

Filter Changes

Filter changes are required at regular intervals. The time period between changes will depend upon the project requirements. Some applications, such as motels, produce a lot of lint from carpeting and linen changes, and will require more frequent filter changes. Check filters at 60-day intervals for the first year until experience is acquired. If light cannot be seen through the filter when held up to sunlight or a bright light, it should be changed. A more critical standard may be desirable.

Filters can be removed without removing any panels. However, if the unit is equipped with a return air grille, this must first be removed to access the filter. To remove the filter:

1. Slide your hands under the front opening on the bottom of the unit and feel for the filter above.
2. Slide your fingers along the bottom of the filter until they reach the rear paperboard edge.
3. Push the paperboard edge back about a half-inch until the front edge of the filter drops down.
4. Remove the filter from under the unit.

To install a new filter:

1. Slide the filter under the unit and tilt its rear edge upward and into the pocket at the rear of the filter housing.
2. Push the front edge of the filter back until it clears the front lip on the filter housing, then push it up and into place.

Figure 20: Filter Removal

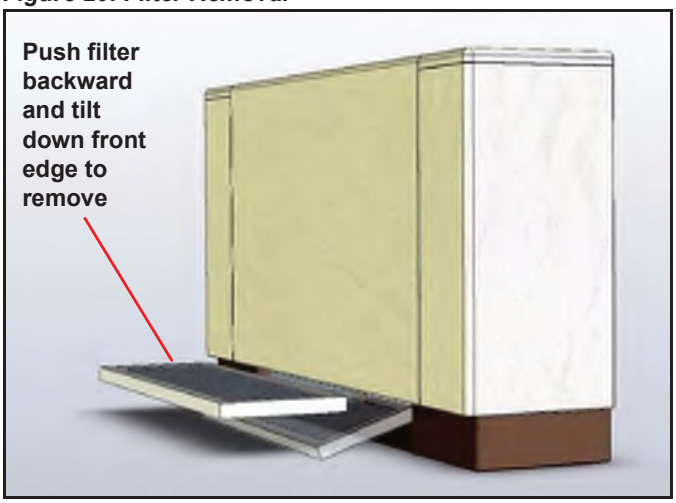

Removing the fan & motor assembly

The fan and motor assembly is housed in the top of the unit's fan deck. It is easily removed for access and cleaning as follows.

1. Disconnect electrical power to the unit.
2. Remove the two screws that attach the center panel of the unit to the base (see Figure 5, page 6).
3. Lift the center panel upward and off the unit.

4 Disconnect the fan motor wiring harness by removing the plug where it attaches to the connector on the side of the chassis. See Figure 21.

Note: Push the tabs inward on the sides of the plug to free it from the connector base.

Figure 21: Motor Connector Location

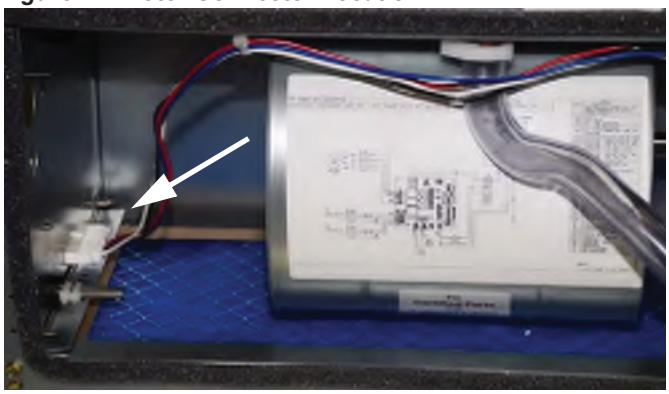

5 Remove the five screws shown in Figure 22 that attach the fan deck to the unit chassis.

6 Firmly grasp the fan deck, then slide it towards you and out of the unit.

7 To reinstall, follow these steps in reverse order.

Figure 22: Drain Pan Locations

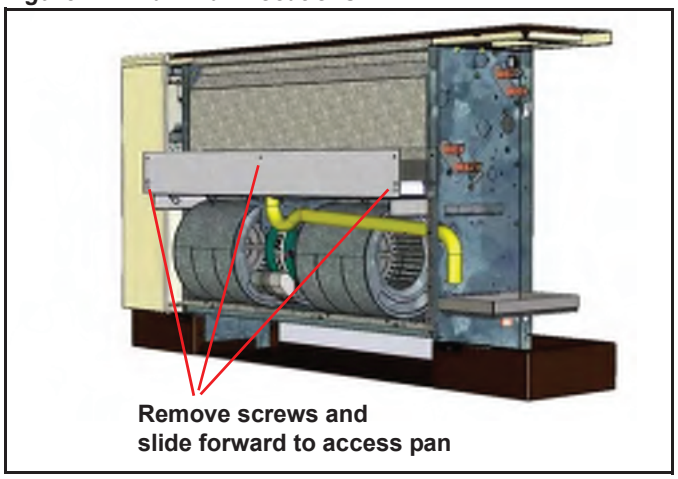

Unit Data

Table 1: Unit Data

	02	03	04	06	08	10	12
Coil Data							
Face Area, ft^2 (cm^2)	0.74 (685)	1.08 (1004)	1.43 (1323)	2.11 (1962)	2.46 (2281)	3.14 (2917)	3.83 (3559)
Fins/inch (cm)	12 [4.7]	12 [4.7]	12 [4.7]	12 [4.7]	12 [4.7]	12 [4.7]	12 [4.7]
Coil Dimensions							
2-Row L x D x H, in (cm	11.8 x 1.7 x 9 (30.0x4.4x22.9)	17.3 x 1.7 x 9 (43.9x4.4x22.9)	22.8 x 1.7 x 9 (57.9x4.4x22.9)	33.8 x 1.7 x 9 (85.9x4.4x22.9)	39.3x 1.7 x 9 (99.8x4.4x22.9)	50.2 x 1.7 x 9 (127.6x4.4x22.9)	61.3 x 1.7 x 9 (155.7x4.4x22.9)
3-Row L x D x H, in (cm	11.8 x 2.6 x 9 (30x6.6x22.9)	17.3 x 2.6 x 9 (43.9x6.6x22.9)	22.8 x 2.6 x 9 (57.9x6.6x22.9)	33.8 x 2.6 x 9 (85.9x6.6x22.9)	39.3 x 2.6 x 9 (99.8x6.6x22.9)	50.2 x 2.6 x 9 (127.6x6.6x22.9)	61.3 x 2.6 x 9 (155.7x6.6x22.9)
4-Row L x D x H, in (cm	11.8 x 3.5 x 9 (30.0x8.8x22.9)	17.3 x 3.5 x 9 (43.9x8.8x22.9)	22.8 x 3.5 x 9 (57.9x8.8x22.9)	33.8 x 3.5 x 9 (85.9x8.8x22.9)	39.3 x 3.5 x 9 (99.8x8.8x22.9)	50.2 x 3.5 x 9 (127.6x8.8x22.9)	61.3 x 3.5 x 9 (155.7x8.8x22.9)
Volume, Gal (Liters)							
2-Row	0.15 (0.6)	0.19 (0.7)	0.24 (0.9)	0.32 (1.2)	0.37 (1.4)	0.46 (1.7)	0.55 (2.1)
3-Row	0.20 (0.7)	0.26 (1.0)	0.32 (1.2)	0.45 (1.7)	0.52 (2.0)	0.64 (2.4)	0.77 (2.9)
4-Row	0.26 (1.0)	0.34 (1.3)	0.43 (1.6)	0.61 (2.3)	0.70 (2.6)	0.87 (3.3)	1.05 (4.0)
Fan/Motor Data							
Fan Quantity	1	1	2	2	3	4	4
Size, Dia” x W” (cm)	6.26 x 6.3 (15.9 x 16)	7.95 x 6.3 (20 x 16)	6.26 x 6.3 (15.9 x 16)	7.95 x 6.3 (20 x 16)	6.26 x 6.3 (15.9 x 16)	6.26 x 6.3 (15.9 x 16)	7.95 x 6.3 (20 x 16)
Motor Quantity	1	1	1	1	2	2	2
Filter Data							
Part Number	668332901	668332902	668332903	668332907	668332905	668332906	668332904
1” (25.4 cm) Media	Throw-away	Throw-away	Throw-away	Throw-away	Throw-away	Throw-away	Throw-away
Quantity	1	1	1	1	2	2	2
L x D x H, in. (cm)	16 x 8.75 x 1 (40.6 x 22 x 2.5)	21.5 x 8.75 x 1 (54.6 x 22 x 2.5)	27 x 8.75 x 1 68.5 x 22 x 2.5	38 x 8.75 x 1 (96.5 x 22 x 2.5)	21.7 x 8.75 x 1 (56.1 x 22 x 2.5)	27.2 x 8.75 x 1 (69.0 x 22 x 2.5)	32.7 x 8.75 x 1 (83.1 x 22 x 2.5)

Table 2:

Table 3: Approximate Shipping Weights - lbs (kg)*

Unit Type	Unit Size						
	S02	S03	S04	S06	S08	S10	S12
FHVC,FHVS	84 (38)	95 (43)	108 (49)	131 (60)	152 (69)	177 (80)	202 (92)
FHVH, FHVI	55 (25)	63 (29)	74 (34)	91 (41)	110 (50)	129 (59)	149 (68)

Note: *Approximate shipping weights do not include valve packages or other options.

Unit Dimensions

Figure 23: Dimensions: Flat Top unit heaters

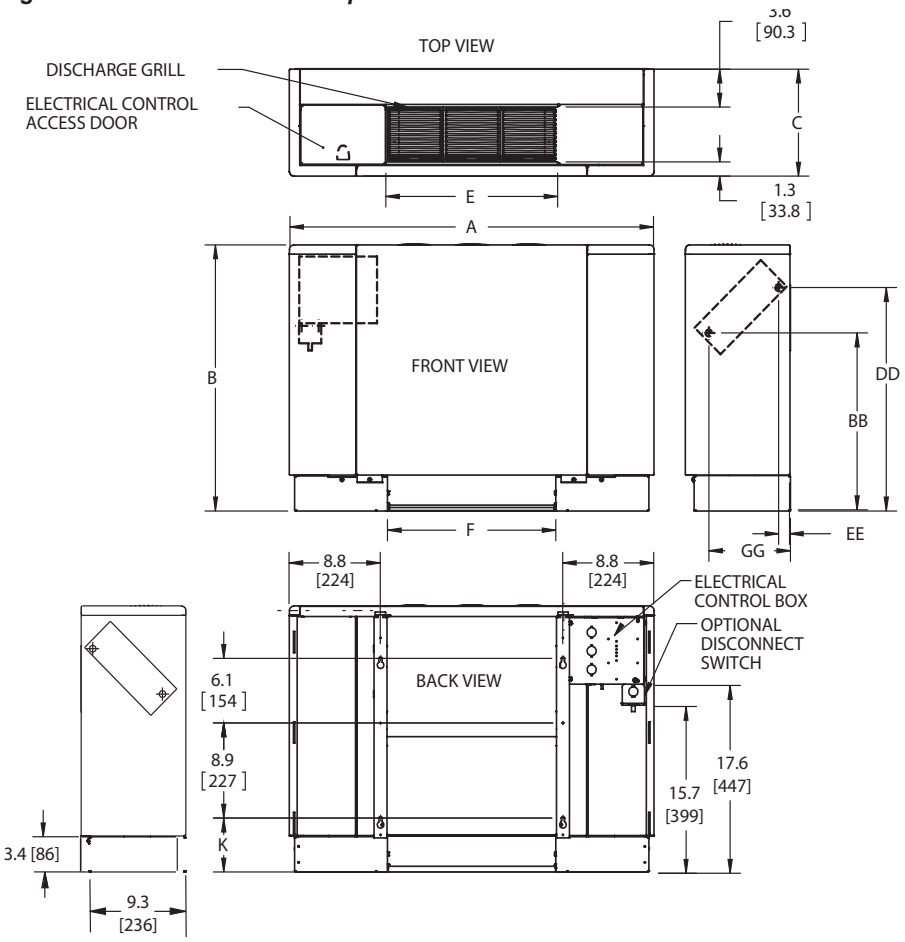

Dimension		S02		S03		S04		S06		S08		S10		S12	
		inch	mm	inch	mm	inch	mm	inch	mm	inch	mm	inch	mm	inch	mm
Unit Width	A	35.0	889	40.5	1029	46.0	1168	57.0	1448	62.5	1588	73.5	1867	84.5	2146
Unit Height	B	25.0	635	25.0	635	25.0	635	25.0	635	25.0	635	25.0	635	25.0	635
Unit Depth	C	10.0	254	10.0	254	10.0	254	10.0	254	10.0	254	10.0	254	10.0	254
Discharge Grille - Width	E	16.3	414	21.8	554	27.3	693	38.3	973	43.8	1113	54.8	1392	65.8	1671
Return Air Opening - Width	F	16.2	411	21.7	551	27.2	691	38.2	970	43.7	1110	54.7	1389	65.7	1669
Floor to Bottom Mtg Hole	K	5	127	5	127	5	127	5	127	5	127	5	127	5	127
Water Supply	BB	16.7	424	16.7	424	16.7	424	16.7	424	16.7	424	16.7	424	16.7	424
	GG	7.8	198	7.8	198	7.8	198	7.8	198	7.8	198	7.8	198	7.8	198
Water Return	DD	21	533	21	533	21	533	21	533	21	533	21	533	21	533
	EE	1.1	28	1.1	28	1.1	28	1.1	28	1.1	28	1.1	28	1.1	28

Figure 24: Dimensions: Slope Top unit heaters

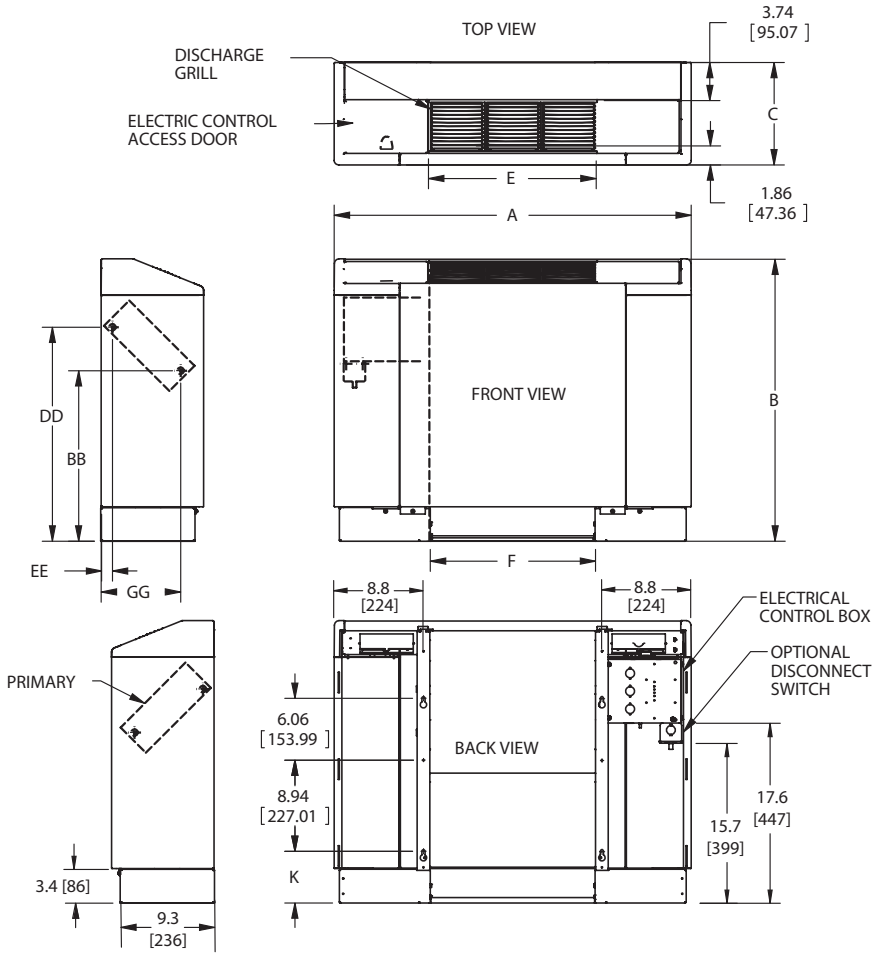

Dimension		S02		S03		S04		S06		S08		S10		S12	
		inch	mm	inch	mm	inch	mm	inch	mm	inch	mm	inch	mm	inch	mm
Unit Width	A	35.0	889	40.5	1029	46.0	1168	57.0	1448	62.5	1588	73.5	1867	84.5	2146
Unit Height	B	27.6	701	27.6	701	27.6	701	27.6	701	27.6	701	27.6	701	27.6	701
Unit Depth	C	10.0	254	10.0	254	10.0	254	10.0	254	10.0	254	10.0	254	10.0	254
Discharge Grille - Width	E	16.3	414	21.8	554	27.3	693	38.3	973	43.8	1113	54.8	1392	65.8	1671
Return Air Opening - Width	F	16.2	411	21.7	551	27.2	691	38.2	970	43.7	1110	54.7	1389	65.7	1669
Floor to Bottom Mtg Hole	K	5	127	5	127	5	127	5	127	5	127	5	127	5	127
Water Supply	BB	16.7	424	16.7	424	16.7	424	16.7	424	16.7	424	16.7	424	16.7	424
	GG	7.8	198	7.8	198	7.8	198	7.8	198	7.8	198	7.8	198	7.8	198
Water Return	DD	21	533	21	533	21	533	21	533	21	533	21	533	21	533
	EE	1.1	28	1.1	28	1.1	28	1.1	28	1.1	28	1.1	28	1.1	28

Figure 25: Dimensions: Hideaway, Front-Discharge unit heaters

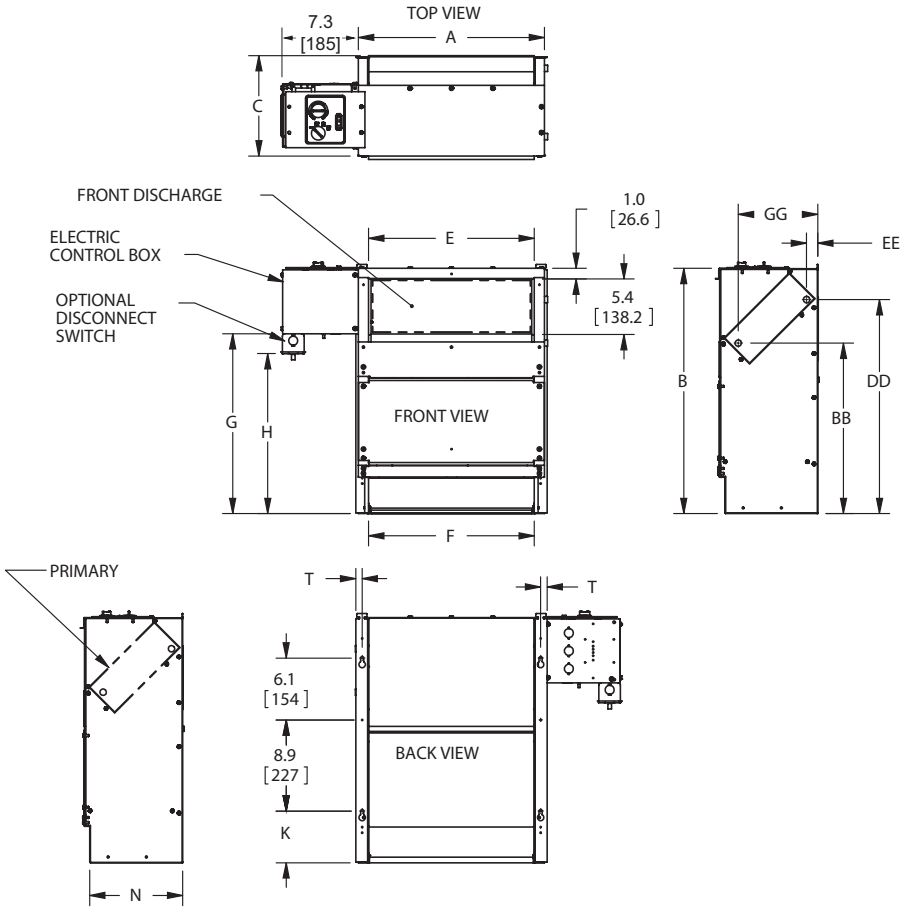

Dimension		S02		S03		S04		S06		S08		S10		S12	
		inch	mm	inch	mm	inch	mm	inch	mm	inch	mm	inch	mm	inch	mm
Unit Width	A	18.8	475	24.3	617	29.8	757	40.8	1036	46.3	1176	57.3	1455	68.3	1735
Unit Height	B	24.0	610	24.0	610	24.0	610	24.0	610	24.0	610	24.0	610	24.0	610
Unit Depth	C	9.6	243	9.6	243	9.6	243	9.6	243	9.6	243	9.6	243	9.6	243
Discharge Grille - Width	E	16.3	414	21.8	554	27.3	693	38.3	973	43.8	1113	54.8	1392	65.8	1671
Return Air Opening - Width	F	16.2	411	21.7	551	27.2	691	38.2	970	43.7	1110	54.7	1389	65.7	1669
Floor to Bottom Mtg Hole	K	5	127	5	127	5	127	5	127	5	127	5	127	5	127
Water Supply	BB	16.7	424	16.7	424	16.7	424	16.7	424	16.7	424	16.7	424	16.7	424
	GG	7.8	198	7.8	198	7.8	198	7.8	198	7.8	198	7.8	198	7.8	198
Water Return	DD	21	533	21	533	21	533	21	533	21	533	21	533	21	533
	EE	1.1	28	1.1	28	1.1	28	1.1	28	1.1	28	1.1	28	1.1	28

Figure 26: Dimensions: Hideaway, Top-Discharge unit heaters

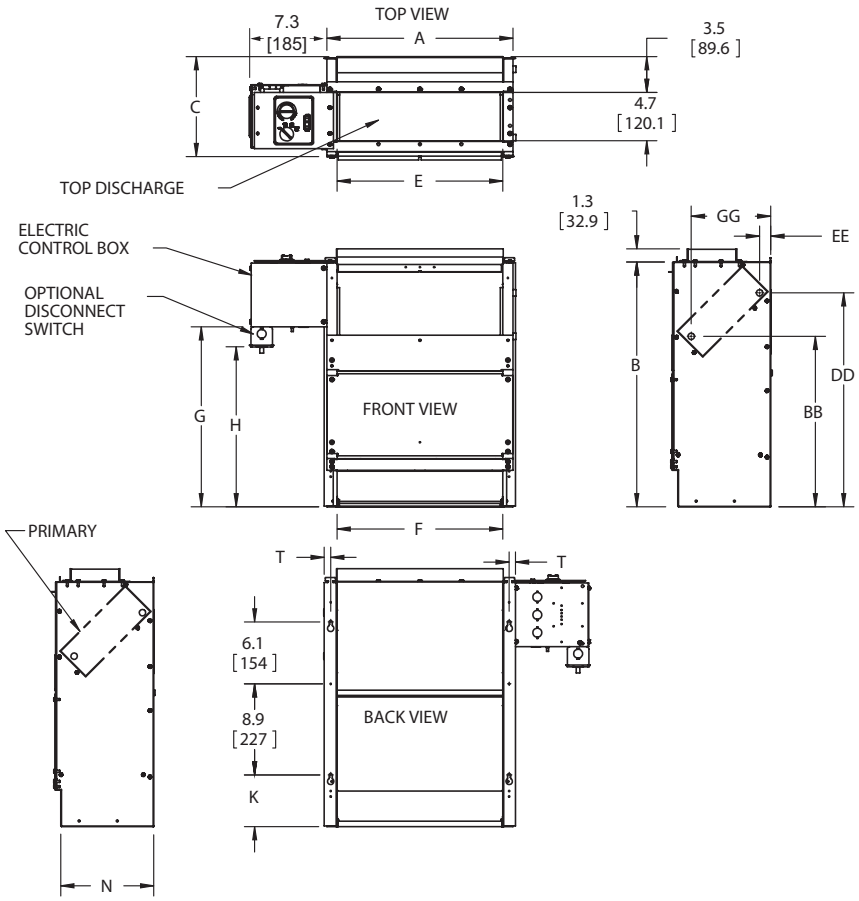

Dimension		S02		S03		S04		S06		S08		S10		S12	
		inch	mm	inch	mm	inch	mm	inch	mm	inch	mm	inch	mm	inch	mm
Unit Width	A	18.8	475	24.3	617	29.8	757	40.8	1036	46.3	1176	57.3	1455	68.3	1735
Unit Height	B	24.0	610	24.0	610	24.0	610	24.0	610	24.0	610	24.0	610	24.0	610
Unit Depth	C	9.6	243	9.6	243	9.6	243	9.6	243	9.6	243	9.6	243	9.6	243
Discharge Grille - Width	E	16.3	414	21.8	554	27.3	693	38.3	973	43.8	1113	54.8	1392	65.8	1671
Return Air Opening - Width	F	16.2	411	21.7	551	27.2	691	38.2	970	43.7	1110	54.7	1389	65.7	1669
Floor to Bottom Mtg Hole	K	5	127	5	127	5	127	5	127	5	127	5	127	5	127
Water Supply	BB	16.7	424	16.7	424	16.7	424	16.7	424	16.7	424	16.7	424	16.7	424
	GG	7.8	198	7.8	198	7.8	198	7.8	198	7.8	198	7.8	198	7.8	198
Water Return	DD	21	533	21	533	21	533	21	533	21	533	21	533	21	533
	EE	1.1	28	1.1	28	1.1	28	1.1	28	1.1	28	1.1	28	1.1	28

Figure 27: Unit Heater Wiring Diagram - Typical with three-speed fan switch

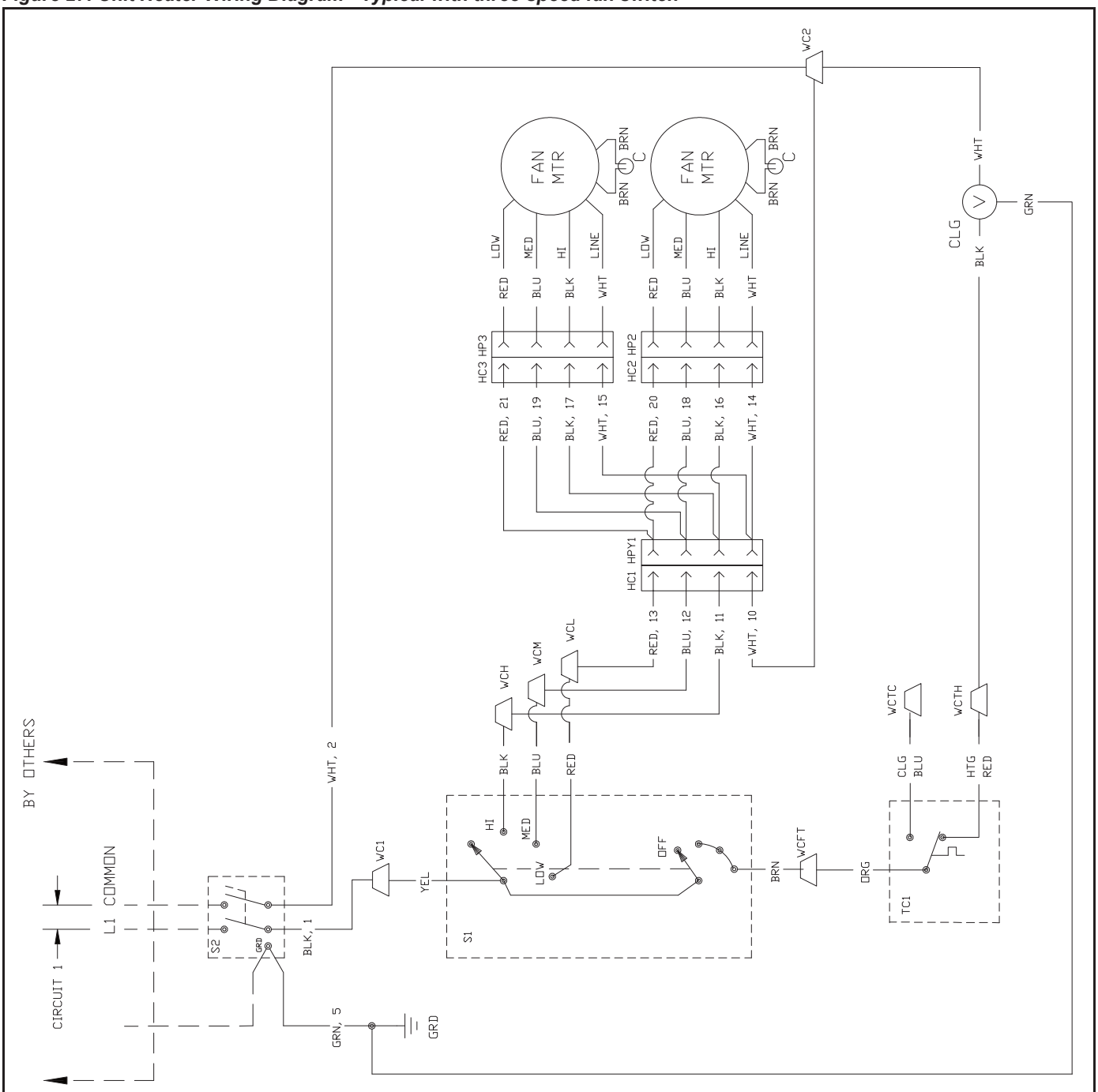

Note: All field-installed conductors should have an insulation rating of 300 volts or greater.

Figure 28: Unit Heater Wiring Diagram - Typical with DDC board

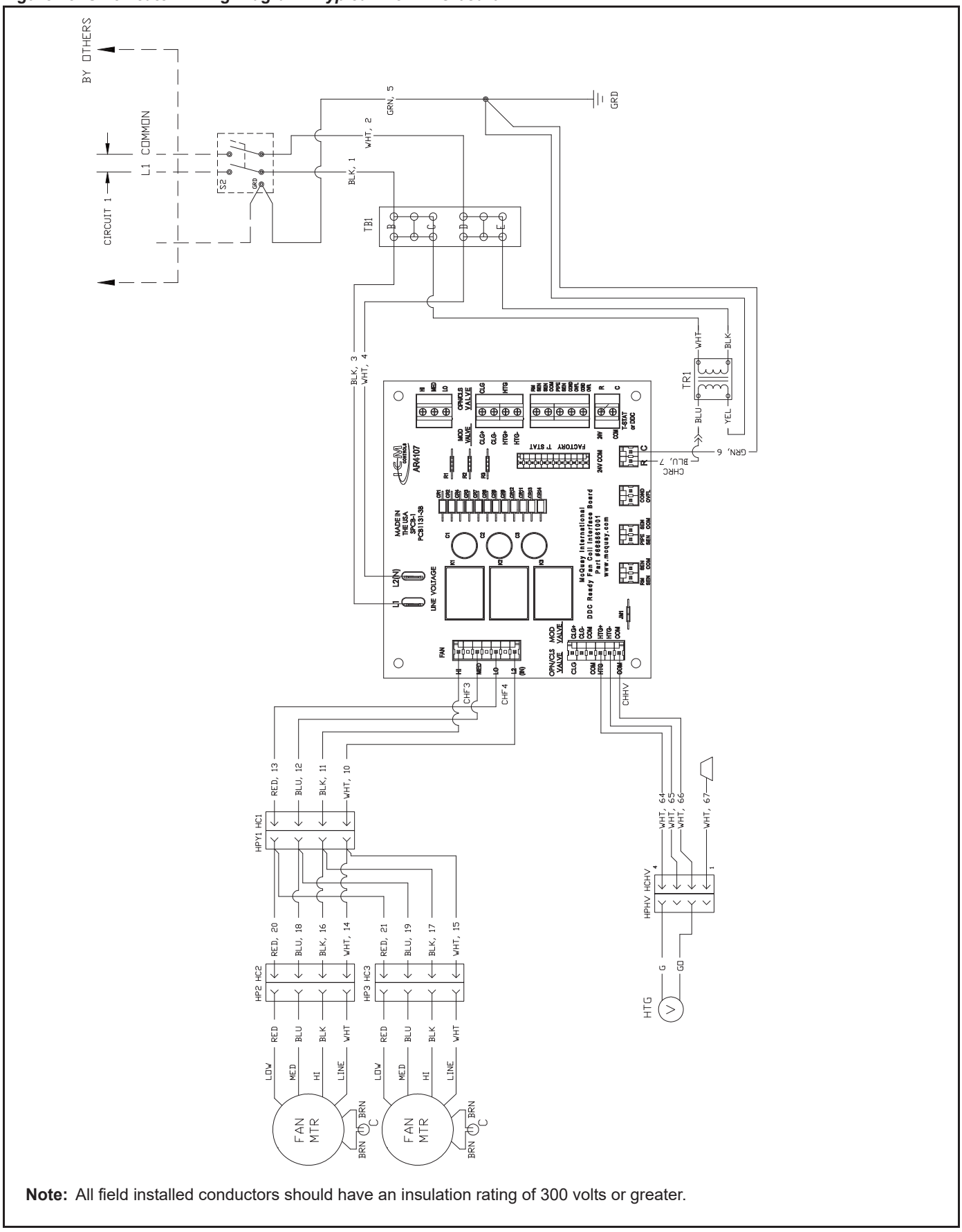

Note: All field installed conductors should have an insulation rating of 300 volts or greater.

Model Number Description

Table 4: Model Number Description: Fields 1 - 21

Field	1	2	3	4	5	6	7	8	9	10	11	12	13	14	15	16	17	18	19	20	21
Code	FC	VC	1	02	A	A	G	M	Y	YY	W	3	12	R	F	T	YY	12	Y	Y	N

1 Unit Type
- FC = fan coil
- FH = cabinet unit heater

2 Product Identifier
- IC = inverted wall hung cabinet
- VC = vertical cabinet, flat top
- VH = vertical hideaway
- VS = vertical cabinet, slope top
- WC = wall-hung cabinet

3 Design Series
- 1 = Design 1

4 Unit Size - nominal capacity
- 02 = 200 cfm
- 03 = 300 cfm
- 04 = 400 cfm
- 06 = 600 cfm
- 08 = 800 cfm
- 10 = 1000 cfm
- 12 = 1200 cfm
- 14 = 1400 cfm

5 Volts/Hertz/Phase
- A = 115/60/1
- E = 208-230/60/1
- J = 265-277/60/1

6 Coil fin type
- A = aluminum

7 Coil casing material
- G = galvanized

8 Coil air vent
- M = manual
- A = auto

9 Coil coating
- Y = none

10 Not currently used
- YY = none

11 Primary Coil Type
- C = chilled water only
- W = CW/HW 2-pipe
- H = hot water only
- S = steam

12 Primary Coil Rows
- 2 = 2 row
- 3 = 3 row
- 4 = 4 row

13 Primary Coil Fins Per Inch
- 12 = 12 fins per inch

14 Primary Coil Connection Hand
- L = left hand
- R = right hand

15 Primary Coil Piping Package
- F = factor installed
- L = shipped loose
- Y = none

16 Primary Coil Connection Type
- S = sweated
- T = threaded
- N = none

17 Preheat Coil Type
- E1 = electric single stage
- W1 = 1-row water
- W2 = 2-row water
- S1 = 1-row steam
- S2 = 2-row steam
- YY = none

18 Preheat Coil Fins Per Inch
- 12 = 12 fins per inch

19 Preheat Coil Connection Hand
- L = left hand
- R = right hand
- Y = none

20 Preheat Coil Piping Package
- F = factor installed
- L = shipped loose
- Y = none

21 Preheat Coil Connection Type
- S = sweated
- T = threaded
- N = none

Table 5: Model Number Description: Fields 21 - 41

Field	22	23	24	25	26	27	28	29	30	31	32	33	34	35	36	37	38	39	40	41
Code	YY	W1	12	R	F	T	Y	000	Y	P	PSC	S	3	Q	Y	MR	Y	D	Y	R

22 Not currently used
- YY = none

23 Reheat Coil Type
- W1 = 1-row water
- S1 = 1-row steam
- YY = none

24 Reheat Coil Fins Per Inch
- 12 = 12 fins per inch

25 Reheat Coil Connection Hand
- L = left hand
- R = right hand
- Y = none

26 Reheat Coil Piping Package
- F = factor installed
- L = shipped loose
- Y = none

27 Reheat Coil Connection Type
- S = sweated
- T = threaded
- N = none

28 Electric Heat Power Supply
- A = 115-60-1
- E = 208-230/60/1
- J = 277-265/60/1
- Y = None

29 Electric Heat Wattage
- 005 = 0.5 kW Electric Heat
- 010 = 1.0 kW Electric Heat
- 015 = 1.5 kW Electric Heat
- 020 = 2.0 kW Electric Heat
- 025 = 2.5 kW Electric Heat
- 030 = 3.0 kW Electric Heat
- 040 = 4.0 kW Electric Heat
- 050 = 5.0 kW Electric Heat
- 060 = 6.0 kW Electric Heat
- 000 = None

30 Not currently used
- YY = none

31 Drain Pan Material
- P = plastic, non-corrosive
- S = stainless steel

32 Blower Motor Type
- PSC = PSC motor
- XXX = special

33 Discharge Conditions
- S = standard static

34 Motor Speed
- 3 = 3 speed

35 Motor Connections
- Q = quick connect

36 Not currently used
- YY = none

37 Fresh Air Damper
- MR = manual rear
- 2R = automatic, 2-position, rear
- ER = automatic, economizer
- XX = special
- YY = none

38 Not currently used
- YYY = none

39 Unit Disconnect Switch
- D = toggle disconnect switch
- X = special
- Y = none

40 Future Control Function
- Y = none

41 Control Type
- A = analog
- D = digital
- R = DDC Ready
- X = Special
- Y = None

Model Number Description

Table 6: Model Number Description: Fields 43-59

Field	42	43	44	45	46	47	48	49	50	51	52	53	54	55	56
Code	Y	Y	Y	RL	MOR	Y	3MOU	YYYY	3MOU	Y	Y	C	Y	Y	Y

42 Network Communication Card
- Y = none

43 Changeover Type
- Y = none
- A = auto
- M = manual
- U = user selectable

44 Programmability
- Y = none

45 Setpoint Adjustment
- YY = none
- UL = unit-mounted, +/- 3 degrees
- UF = unit-mounted, full range
- RL = remote-mounted, +/- 3 degrees
- RF = remote-mounted, full range

46 Fan Speed Control
- YYY = None
- MOU = manual, on/off, unit-mounted
- MOR = manual, on/off, remote-mounted
- MAU = manual, low/med/high, unit-mounted
- MAR = manual, low/med/high, remote-mounted
- MPU = manual, off/proportional, unit-mounted
- MPR = manual, off/proportional, remote-mounted
- SOU = SCR, on/off, unit-mounted
- SOR = SCR, on/off, remote-mounted
- SAU = SCR, low/med/high, unit-mounted
- SAR = SCR, low/med/high, remote-mounted
- SPU = SCR, off/proportional, unit-mounted
- SPR = SCR, off/proportional, remote-mounted

47 Timed Override
- Y = none

48 Valve - Primary Coil
- See Table 7

49 Valve - Preheat Coil
- See Table 7

50 Valve - Reheat Coil
- See Table 7

Table 7: Model Number Detail: Coil Valve Fields 49, 50, 51

3 O M U

Coil Valve Type
Y = none
2 = two-way
3 = three way

Unpowered Position
Y = none
C = closed
O = open

Control Type
Y = none
E = EOC
M = modulating

Actuator Input
Y = None
L = Low Voltage (24 Volt)
U = Unit Voltage
P = 0-10V Proportional
F = 3 Wire Floating Point

51 Future Control Function
- Y = None

52 Low Temperature Protection
- Y = None
- X = special

53 Condensate Overflow Protection
- C = condensate overflow protection
- Y = None
- X = special

54 Discharge Air Thermistor
- Y = None
- X = special

55 Smoke Input Sensor
- Y = None
- X = special

56 Occ / Vacant Control Input
- Y = None
- X = special

Table 8: Model Number Description: Fields 57 - 72

Field	57	58	59	60	61	62	63	64	65	66	67	68	69	70	71	72
Code	Y	Y	Y	Y	S	18	P	I	00	S	00	00	30F	TA	FR	1

57 Filter Status Sensor
- Y = None
- X = special

58 Fan Status Sensor
- Y = None
- X = special

59 Future Control Function
- Y = None

60 Future Control Function
- Y = None

61 Cabinet Style
- S = Standard
- T = Tamperproof
- Y = None

62 Cabinet Gauge
- 16 = 16 Gauge
- 18 = 18 Gauge
- YY = None
- XX = Special

63 Cabinet Coating Type
- B = Powder Coat
- Y = None

64 Color- Cabinet
- I = Antique Ivory
- W = Off White
- G = Soft Gray
- C = Cupola White
- P = putty Beige
- Y = None
- X = Special

65 Cabinet Depth Extension
- 00 = None
- 04 = 4 Inch Extended Depth
- 08 = 08 inch Extended Depth

66 Unit Lineup Position
- S = Standalone

67 Left Hand End Pocket Extension
- 00 = None
- 04 = 4 Inch Extended Length
- 08 = 8 inch Extended Length

68 Right Hand End Pocket Extension
- 00 = None
- 04 = 4 Inch Extended Length
- 08 = 8 inch Extended Length

69 Subbase
- 30F = 3" subbase with leveling feet
- 30Y = 3" subbase without leveling feet
- XXF = special with leveling feet
- XXY = special without leveling feet
- YYY = none

70 Discharge Air - Outlet
- TA = top discharge with stamped louver grille
- TB = top discharge with multi-directional grille
- TY = top discharge with no grille
- TD: top discharge with duct collar
- FD = front discharge with duct collar
- FY = front discharge with no duct collar
- BD = bottom discharge with duct collar
- BY = bottom discharge with no duct collar
- XX = special

71 Return Air Inlet
- FR = front inlet with open return
- FS = front inlet with stamped louver
- FT = front inlet with toe space
- TR = top inlet with open return
- TS = top inlet with stamped louver
- BR = bottom inlet with open return
- BS = bottom inlet with stamped louver
- BT = bottom inlet with toe space
- XX = special

72 Filter
- 1 = 1” Throwaway Filter
- 3 = 1” Throwaway + (1) Extra

Table 9: Model Number Description: Fields 73 - 78

Field	73	74	75	76	77	78
Code	YYY	Y	A	S	Y	1

73 Special Options

- YYY = none

74 Reserved for future use

- Y = none

75 Agency Listing

- A = ETL, CETL, ARI
- R = ETL, CSA
- X = special
- Y = none

76 Packaging

- S = Standard
- T = palletized based on tagging and by floor

77 Extended Warranty

- Y = none (standard warranty)
- 1 = 1 year Extended component warranty (30 month from shipment or 24 month from installation)
- 2 = 2 year Extended component warranty (42 month from shipment or 36 month from installation)
- 3 = 3 year Extended component warranty (54 month from shipment or 48 month from installation)
- 4 = 4 year Extended component warranty (66 month from shipment or 60 month from installation)
- X = special

78 Product Style

- 1 = Style 1
-

Daikin Training and Development

Now that you have made an investment in modern, efficient Daikin equipment, its care should be a high priority. For training information on all Daikin HVAC products, please visit us at www.DaikinApplied.com and click on training, or call 540-248-9646 and ask for the Training Department.

Warranty

All Daikin equipment is sold pursuant to its standard terms and conditions of sale, including Limited Product Warranty. Consult your local Daikin representative for warranty details. Refer to Form 933-430285Y. To find your local Daikin representative, go to www.DaikinApplied.com.

This document contains the most current product information as of this printing. For the most up-to-date product information, please go to www.DaikinApplied.com.

© 2013 Daikin Applied • www.DaikinApplied.com • 800-432-1342